Notes for safety：

1． This RC heli model is not a low motivity doll. It is with big force and high flying speed. Please try it under the guiding of somebody experienced.

2． Please fly under a safe condition.

3． After switch on the electricity, the heli might shake strongly or out of control when affected by electronic waves. Such as near the domestic electronic equipment, under a high pressure environment, or there is other remote controller using the same radio channel, or other unidentified wave. .So remember to keep a far and safe distance from these and people. Please be alert every minute and second.

4． The battery used here might cause a fire in case of short, dampness, bump, cracking and over loading.

5． This heli has a max rev. The max rev of the frame part is 3300rpm, and the max rev of main rotor, please look at the sign on the package. Please do not try to test it with the max rev. as in this situation the main rotor will be overloaded.

6． Please check and renew the main rotor frequently, as the stuff will be degraded and with less intensity after fierce and high speed movement.

7． Please electricize the battery according to the guide line related, so as to prevent any danger.

8． The players should be responsible for their own deed and responsible for the damage and injury happened during the operation process, if any.

SJM400 PRO

KIT:

- Kit weight (W/O main blade)： 217g
- RTF weight:： 600g
- Main rotor diameter： 655mm
- Main rotor specification： 305×30mm
- Flybar rod： 210×1.5mm
- Flybar rod specification： 58×30mm
- Tail rotor diameter： 110mm
- Tail rotor specification： 45×18mm
- Main shaft diameter： 4mm
- Tail rotor shaft diameter： 2mm
- Tail boom diameter (outer)： 11mm
- Drive belt specification： 302MXL, width 2.5mm
- Main rotor： Changeable screw distance
  Adjustable mixing control;
  Flybar in ball shape
  Direct connected flybar control rod
- Revolving swash plate： ccpm120 degree
- Tail rotor blade： anti-shaking outer bearing in box shape
- Main drive gear： M0.4 180T
- Tail drive gear： M0.4 36T
- Speed ratio of main and tail drive gear： 1： 5.294
- Motor diameter limitation： 26mm
- 43 bearings on the whole kit

The whole heli is made of aluminum alloy, carbon fiber(SJM400 PRO-C), and fiberglass (SJM400 PRO-F) material and through CNC technology

Motor And Other Electronics：

A set of remote controller and receiver with over six channels(in support of ccpm120degree) (optional)
A set of motor, ESC and BEC4.8~6v (optional)
One or more batteries 11.1~14.8v (optional)
4 micro servos (optional)
One gyro (optional)
One battery charger (optional)

1

NO.	Part NO.	Discription	Q'TY	Specification	NO.	Part NO.	Discription	Q'TY	Specification
1	AL3016	Sliding shaft	1		5	AL3036	Underlay	2	Ø1.5×Ø2.5×0.5mm
2	AL3018	Tail claw	2		6	AL3018	Safety botton	2	
3	SJ10007	Bearing	4	Ø1.5×Ø4×2mm	7	SJ40001	Round head screw	2	M1.6×6mm
4	SJ20002	Cap screw	2	M1.5×7mm	8	AL3018	Cushion tube	2	Ø1.6×Ø3×2.9mm

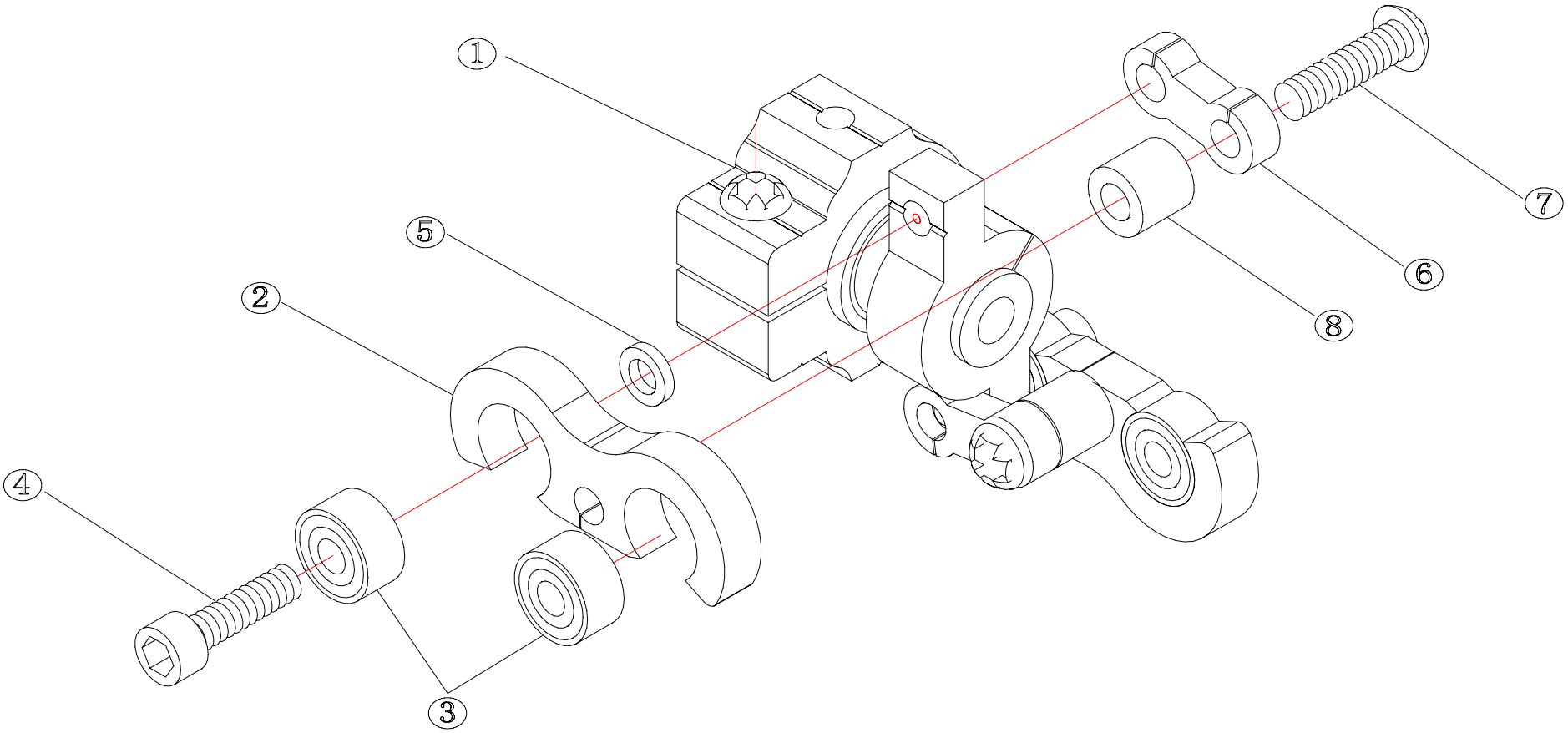

2

NO.	Part NO.	Discription	Q'TY	Specification	NO.	Part NO.	Discription	Q'TY	Specification
9	SJ20002	Cap screw	2	M1.5×7mm	13	PL1006	Tail blade	2	
10	SJ10007	Bearing	4	Ø1.5×Ø4×2mm	14	SJ20004	Cap screw	2	M2×8mm
11	AL3019	Tail blade clamp	2		15	SJ70001	Nut	2	M2
12	AL3020	Tail rotor head center	1						

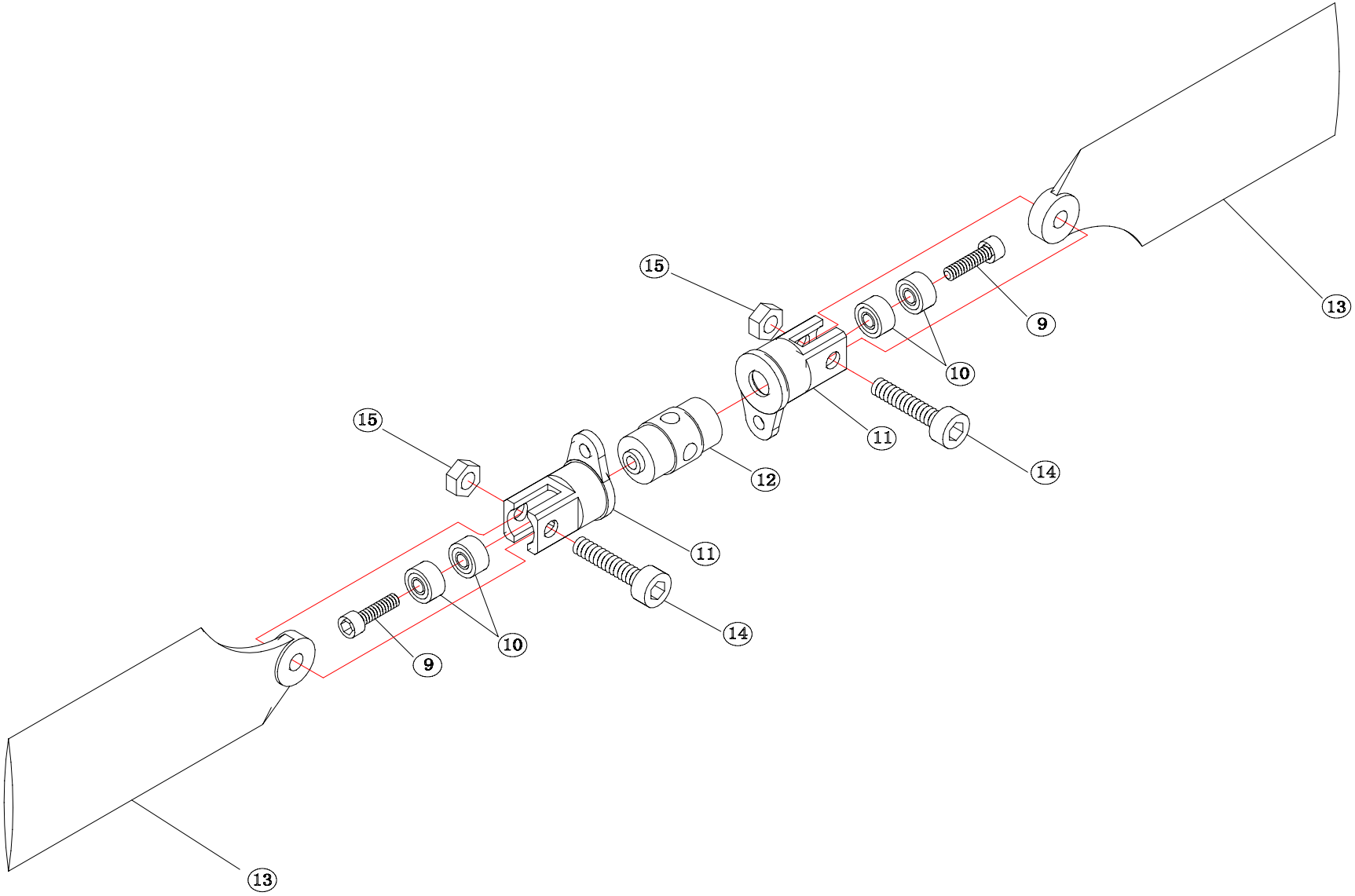

3

NO.	Part NO.	Discription	Q'TY	Specification	NO.	Part NO.	Discription	Q'TY	Specification
16	SJ20002	Cap screw	2	M1.5×7mm	18	AL2042	Screw cap	2	Ø1.5×Ø3.5×3mm
17	AL3036	Underlay	2	Ø1.5×Ø2.5×0.5mm					

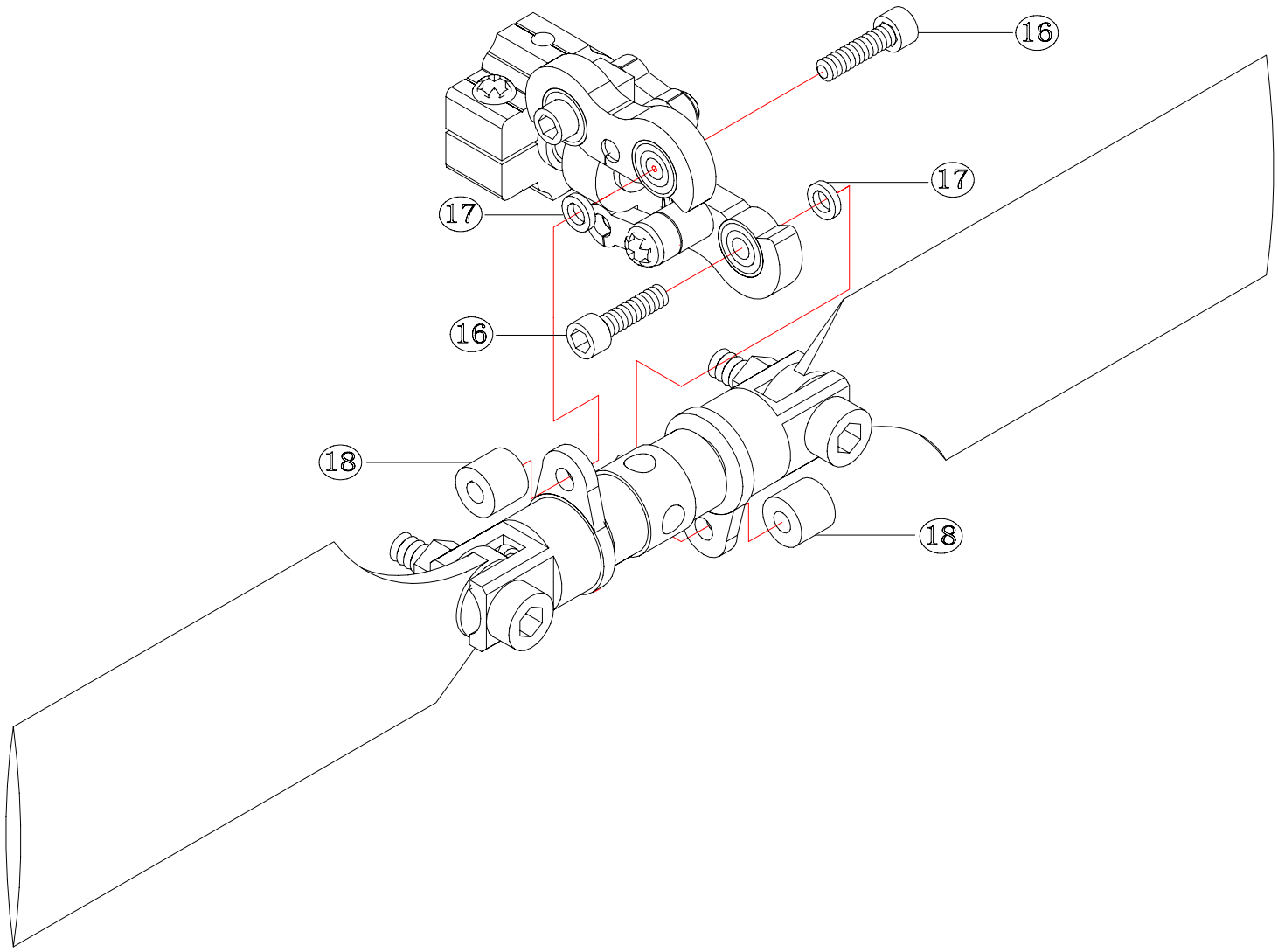

NO.	Part NO.	Discription	Q'TY	Specification	NO.	Part NO.	Discription	Q'TY	Specification
19	AL3017	Tail shaft housing	1		26	AL2044/CF2003	ALU/Carbonfiber tail boom	1	
20	AL3015	Adjusting tail mount	1		27	SJ10005	Flange bearing	1	Ø2×42mm
21	SJ20003	Cap screw	2	M2×5mm	28	HS3006	Tail shaft on belt wheel	1	Ø1.5×Ø3.5×3mm
22	FG3011-F/C	Fiberglasslateral (F) / Carbonfiber (C) plate	1		29	FG3004-F/C	Fiberglasslateral (F) / Carbonfiber (C) vertial paralle blade	1	
23	SJ20003	Cap screw	1	M2×5mm					
24	FG3011-F/C	Linkage tube	1	Ø2×Ø4×8mm	30	SJ20004	Cap screw	2	M2×12mm
25	DB1001	Drive belt	1		31	FG3004-F/C	Vertial stabilizer cushion tube	2	Ø2×Ø4×4mm

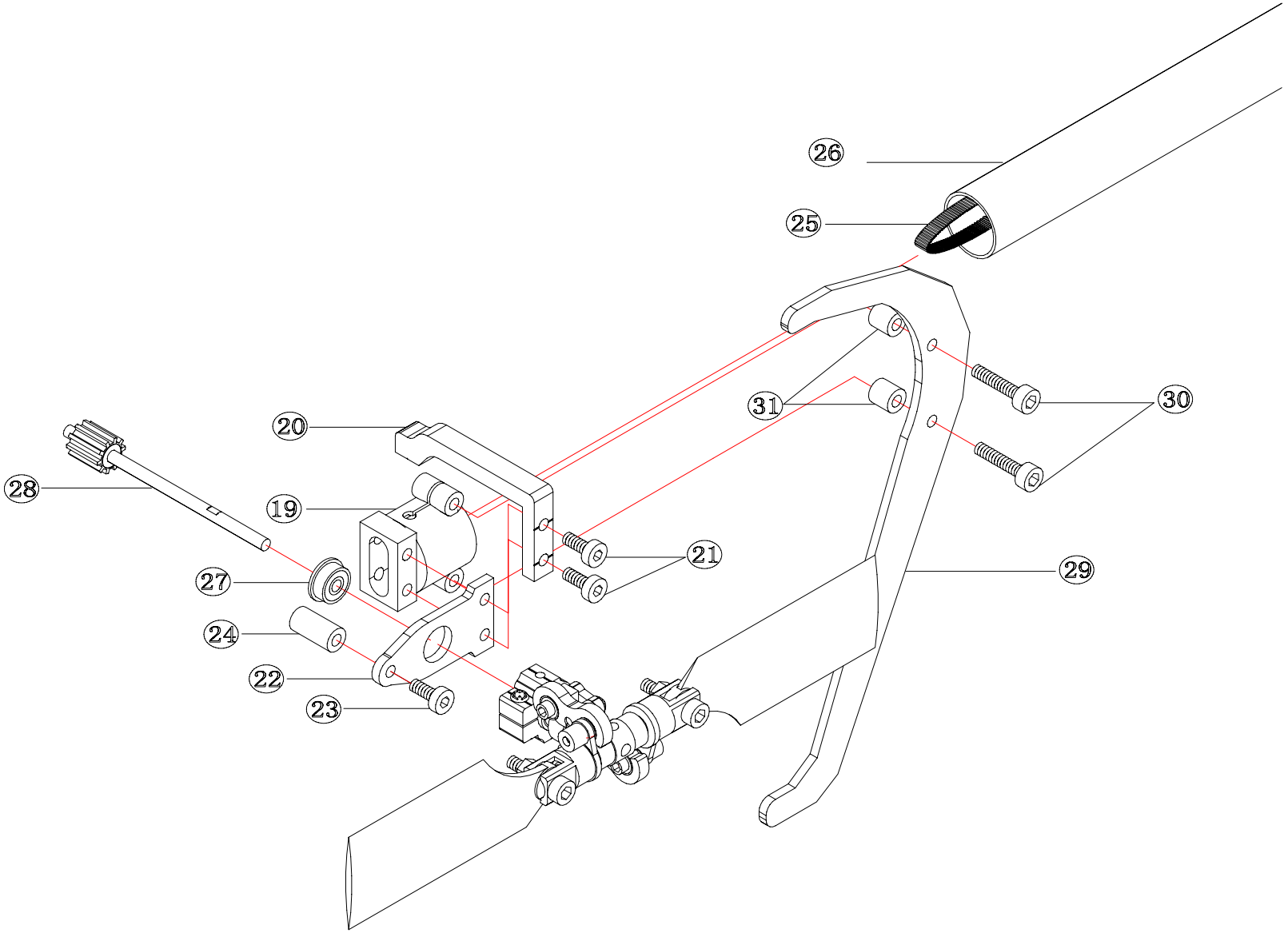

NO.	Part NO.	Discription	Q'TY	Specification	NO.	Part NO.	Discription	Q'TY	Specification
32	SJ20007	Set screw	2	M2×2mm	39	SJ30007	Countersunk screw	2	M1.6×5mm
33	SJ10005	Flange bearing	1	Ø2×Ø6×2.5mm	40	SJ30001	Countersunk screw	1	M1.6×4mm
34	FG3011-F/C	Fiberglasslateral (F) / Carbonfiber (C) lateral plate	1		40—1	SJ30007	Countersunk screw	1	M1.6×5mm
35	SJ20012	Cap screw	2	M2×4mm	41	AL3015	Tail torque converter	1	
36	SJ20003	Cap screw	1	M2×5mm	42	SJ20005	Cap screw	1	M2×10mm
37	SJ30002	Countersunk screw	1	M1.6×6mm	43	SJ10010	Bearing	2	Ø2×Ø6×2.5mm
38	AL1039	Ball link	1		44	AL3036	Underlay	1	M2

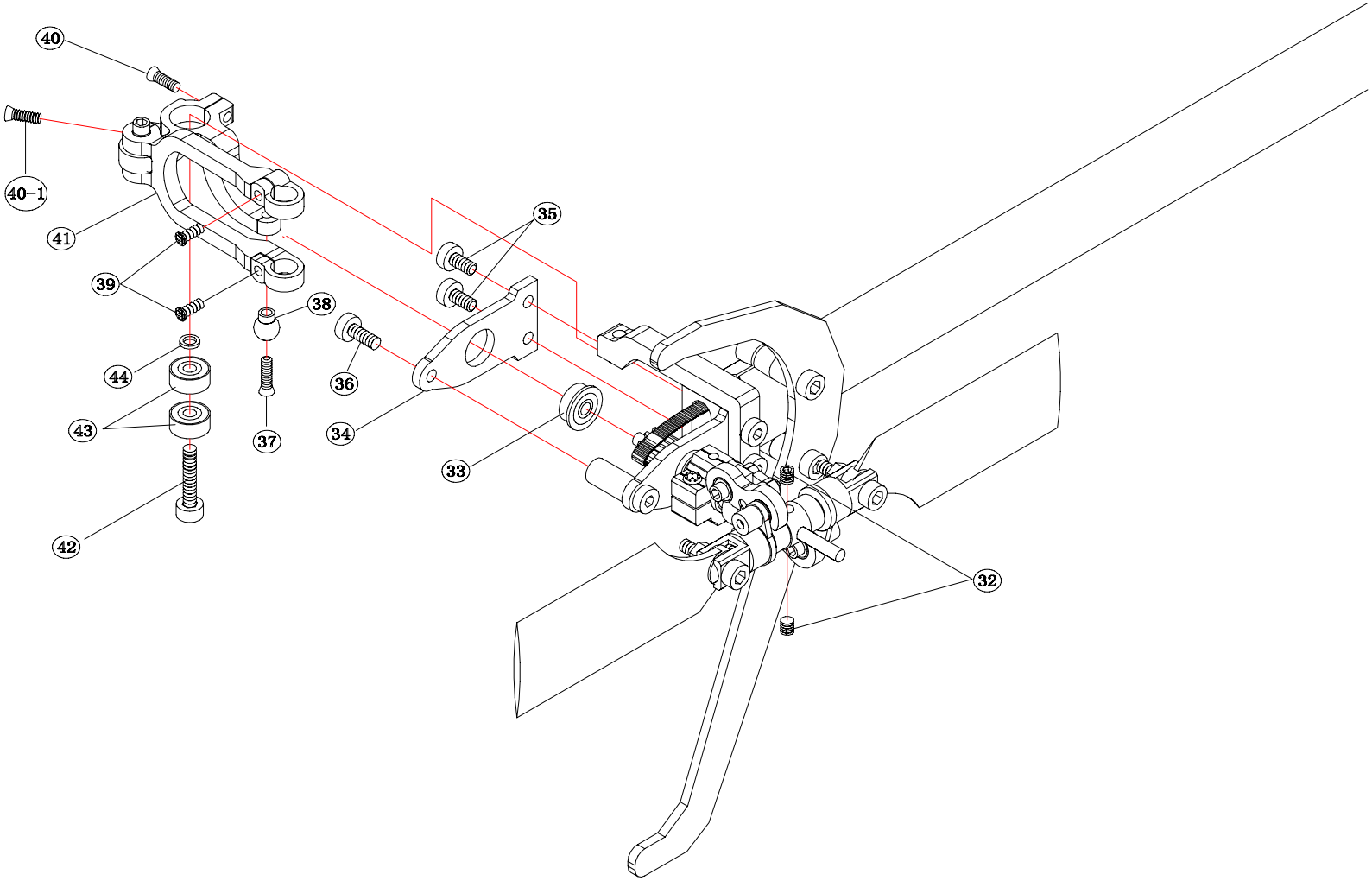

NO.	Part NO.	Discription	Q'TY	Specification	NO.	Part NO.	Discription	Q'TY	Specification
45	SJ20001	Cap screw	2	M1.5×4mm	56	AL3021	Tail shaft tube	1	Ø2×Ø4×4mm
46	SJ10007	Bearing	2	Ø1.5×Ø4×2mm	57	SJ20003	Cap screw	1	M2×5mm
47	AL3036	Underlay	2	Ø1.5×Ø2.5×0.5mm	58	SJ20003	Cap screw	1	M2×5mm
48	AL3025	Horizontal stand	1		59	SJ40002	Round head screw	1	M1.6×4mm
49	AL3024	Connecting rod rest	1		60	SJ20003	Cap screw	1	M2×5mm
50	AL3023	Tail boom stand	1		61	SJ20003	Cap screw	2	M2×5mm
51	AL3022	Tail servo mount	2		62	CF2002	Tail servo link	1	
52	FG1007-F/C	Fiberglasslateral (F) / Carbonfiber (C) Level blade	1		63	SJ30002	Tstainless steel screw	1	M1.6×6mm
53	AL3021	Bearing stand of tail rotor shaft	1		64	SJ20003	Cap screw	2	M2×5mm
54	SJ20003	Cap screw	1	M2×5mm	65	AL30236	Underlay	2	M2.5
55	SJ10010	Bearing	1	Ø2×Ø6×2.5mm					

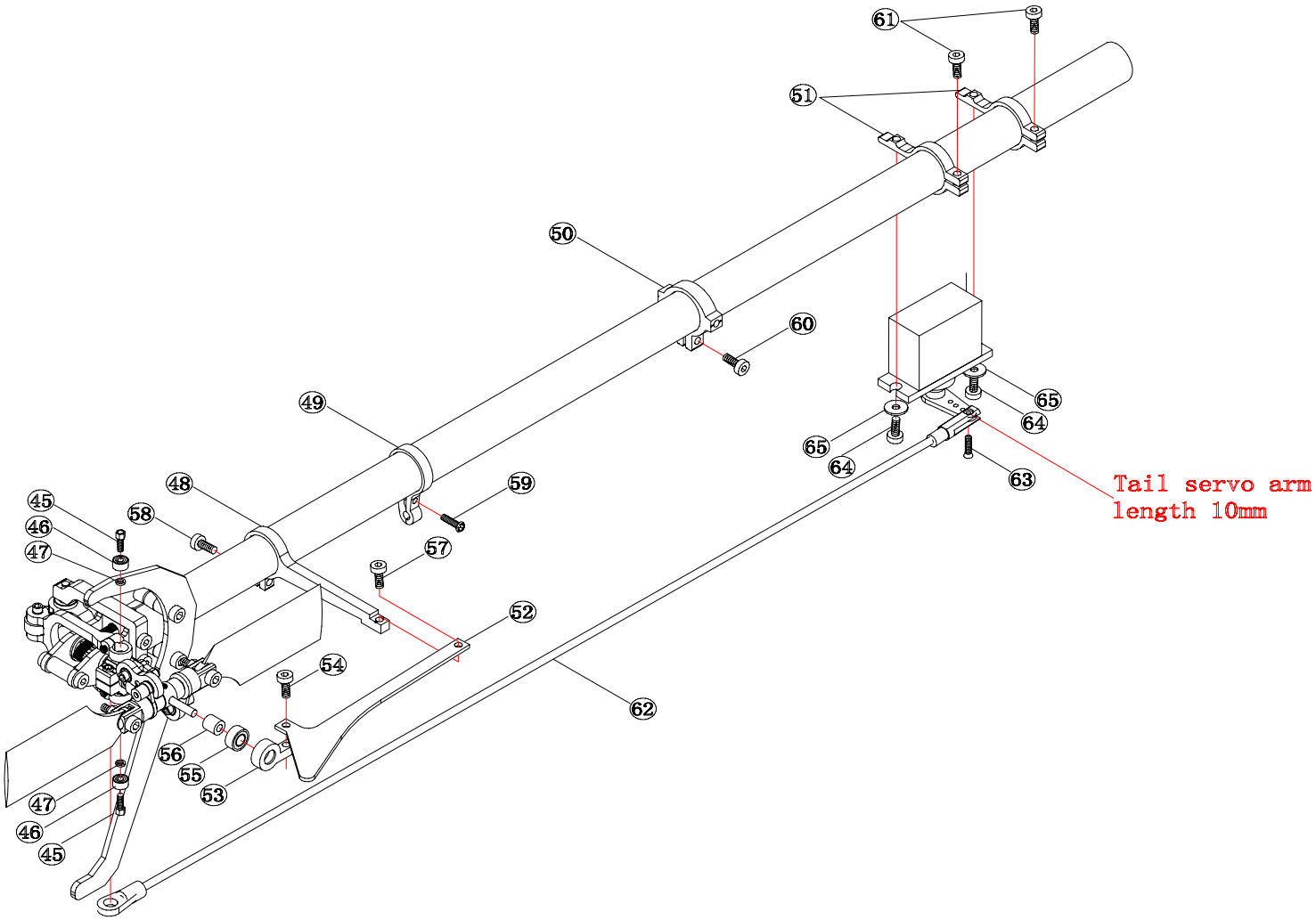

NO.	Part NO.	Discription	Q'TY	Specification	NO.	Part NO.	Discription	Q'TY	Specification
66	AL3006	Tail boom link	2		72	SJ10005	Flange bearing	2	Ø2×Ø6×2.5mm
67	SJ20004	Cap screw	2	M2×8mm	73	FG3012-F/C	Fiberglasslateral (F) / Carbonfiber (C) Tail drive gear board	2	
68	HS3008	Front shaft belt wheel	1						
69	PL2003	Tail drive gear set	1		74	SJ20003	Cap screw	8	M2×5mm
70	SJ20009	Set screw	2	M3×3mm	75	FG3008-F/C	Fiberglasslateral (F) / Carbonfiber (C) Gyro board	1	
71	SJ3036	Underlay	1	M2	76	SJ30009	Countersunk screw	2	M2×3mm

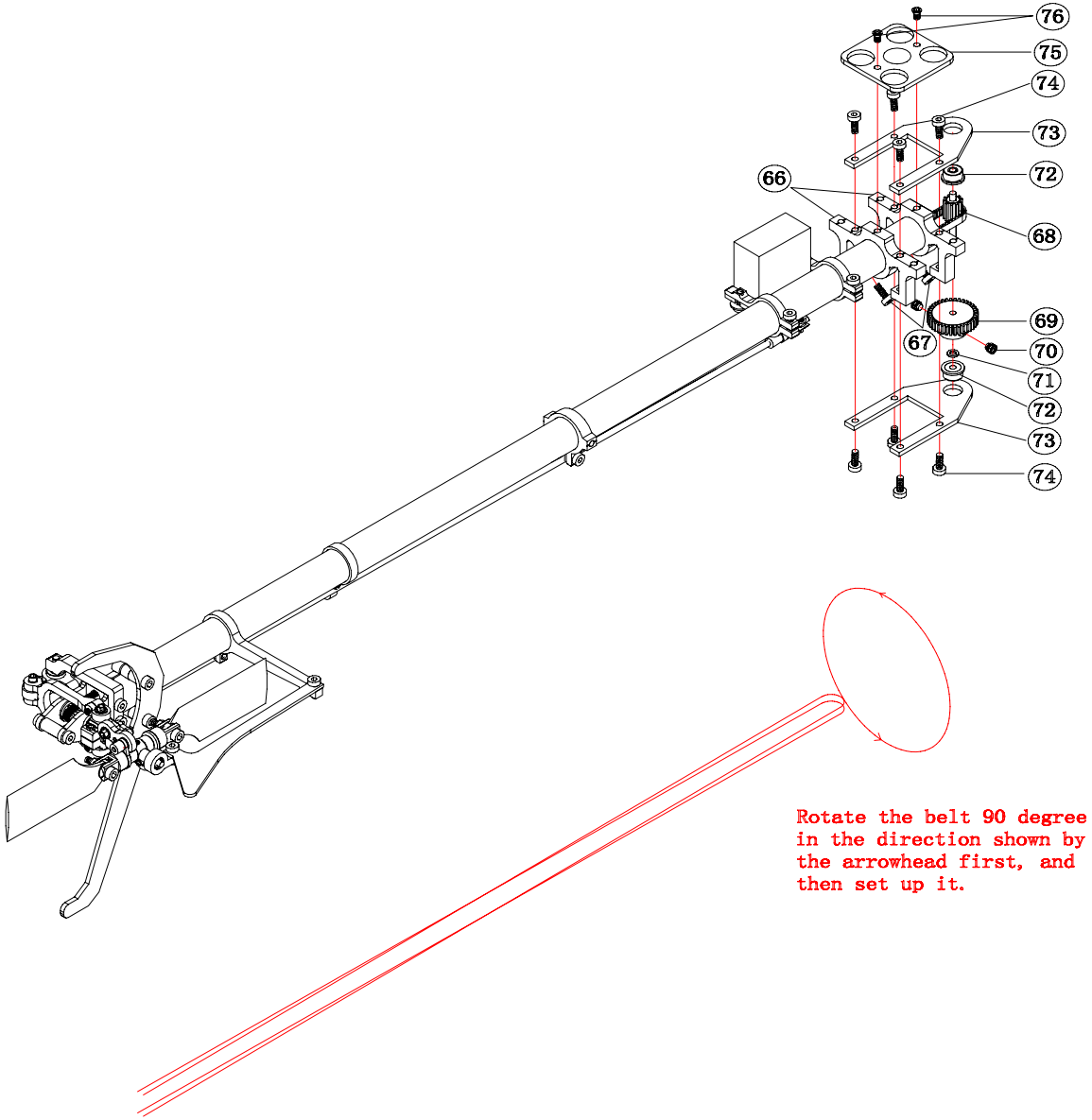

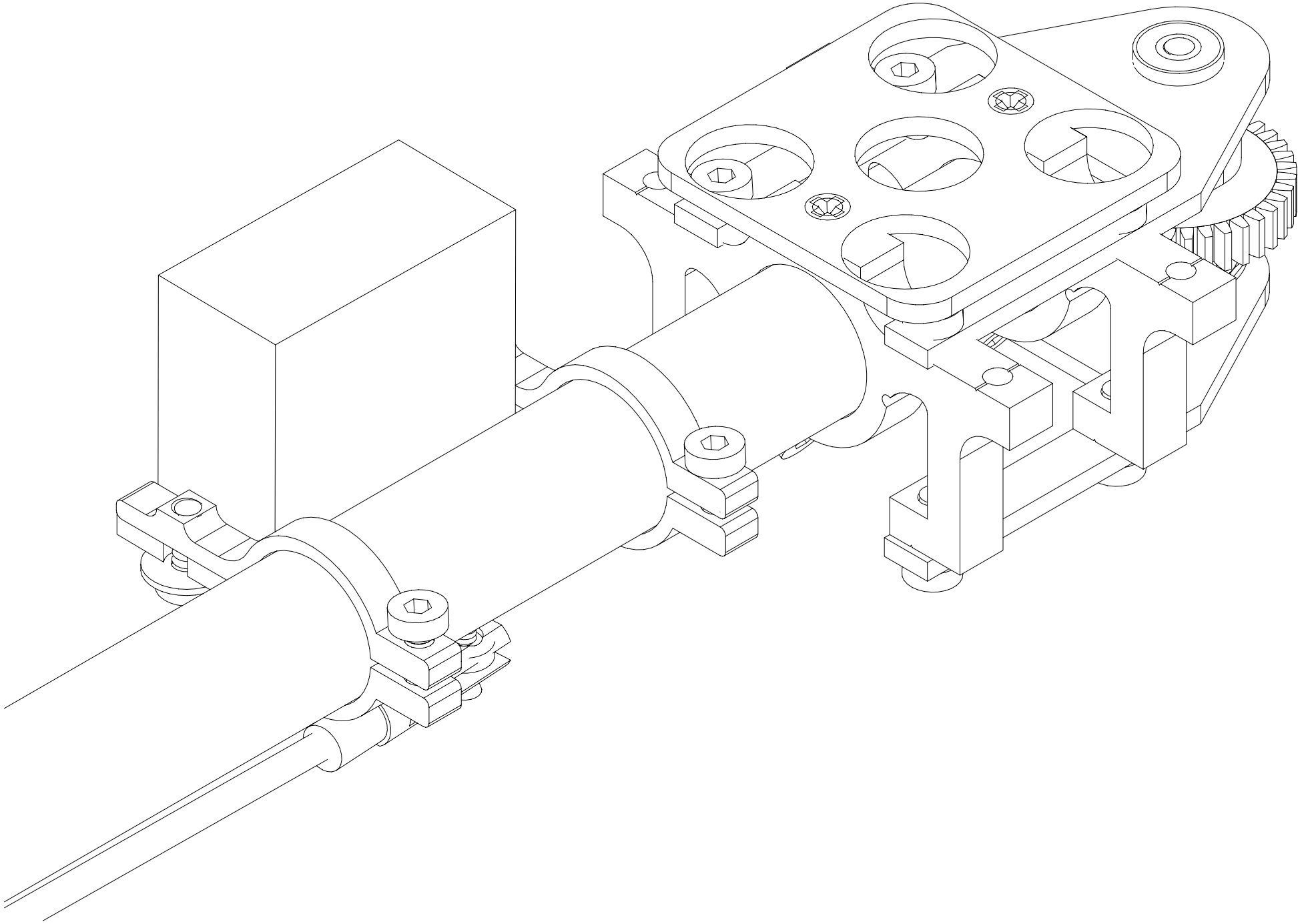

NO.	Part NO.	Discription	Q'TY	Specification	NO.	Part NO.	Discription	Q'TY	Specification
77	AL3011	flybar stand	1		82	AL3037	linkage ball safety botton	2	M2
78	AL3012	flybar ball	1		83	AL1039	linkage ball	2	
79	HS1001	flybar rod	1	Ø1.5×210mm	84	AL3012	washer	2	Ø1.6×Ø3×1.4mm
80	SJ20009	set screw	2	M3×3mm	85	SJ20009	set screw	3	M3×3mm
81	SJ30006	countersunk screw	2	M1.6×10mm					

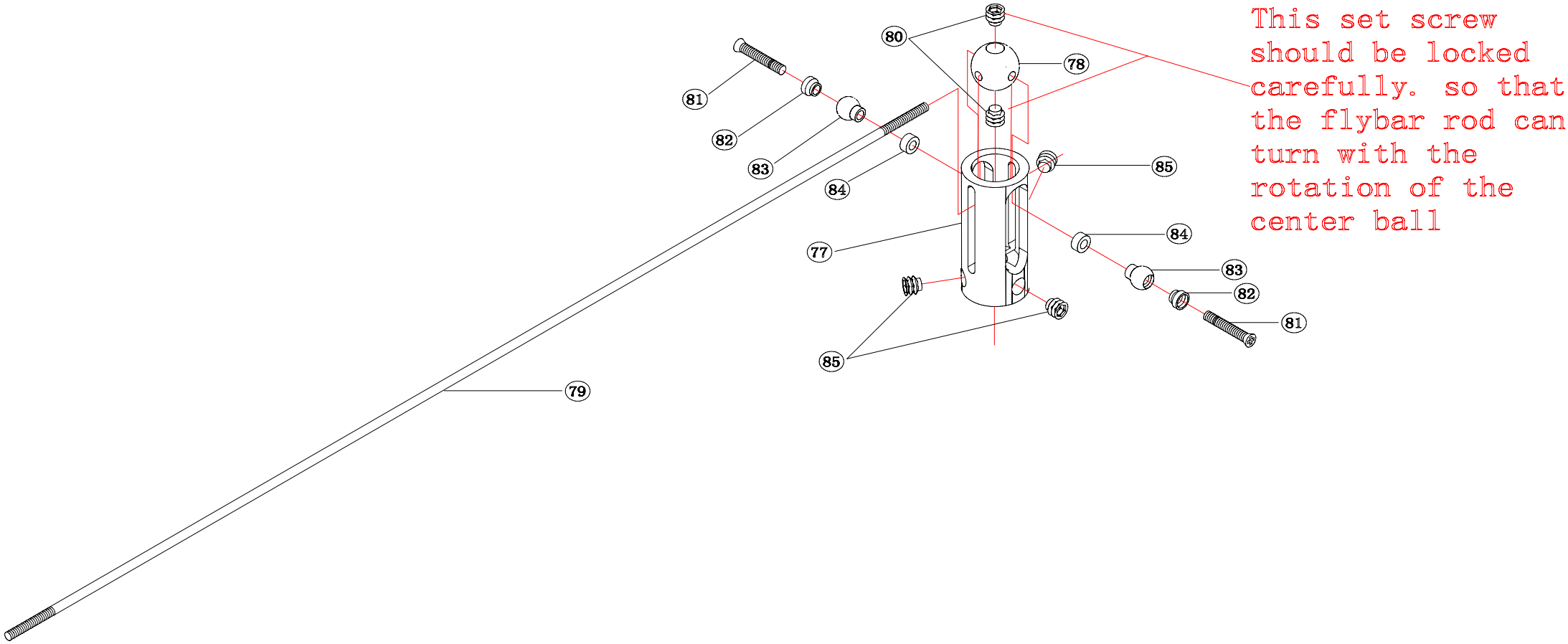

NO.	part No	Discription	Q'TY	Specification	No	part No	Discription	Q'TY	Specification
86	HS3003	Feathering shaft screw	2	M3×16mm	98	AL3036	Underlay	2	Ø2×Ø3.5×0.5mm
87	SJ10008	Bearing	6	Ø3×Ø6×2.5mm	99	AL3013	Mixing arm	2	
88	AL3007	Main blade clincher	2		100	SJ30006	Countersunk screw	2	M2×10mm
89	AL3008	Main blade clincher arm	2		101	SJ10010	Bearing	4	Ø2×Ø6×2.5mm
90	HS3004	Stainless steel masher	2	Ø3×Ø5×1.5mm	102	SJ40001	Round head screw	2	M1.6×6mm
91	AL3010	Main rotor head center	1		103	HS1007	Linkage rod	2	M1.6×7mm
92	SJ20005	Cap screw	2	M2×10mm	104	PL1010	Ball link	2	H11mm
93	SJ20005	Cap screw	2	M2×10mm	105	SJ40001	Round head screw	2	M1.6×6mm
94	AL3009	Main blade clincher link	2	Ø2×Ø4×13mm	106	SJ20009	Set screw	2	M3×3mm
95	SJ20005	Cap screw	2	M2×10mm	107	HS1002	Main shaft	1	Ø4×109mm
96	AL3004	Mixing linkage rod subassembly	2		108	SJ20005	Cap screw	1	M2×10mm
97	SJ10010	Bearing	4	Ø2×Ø6×2.5mm					

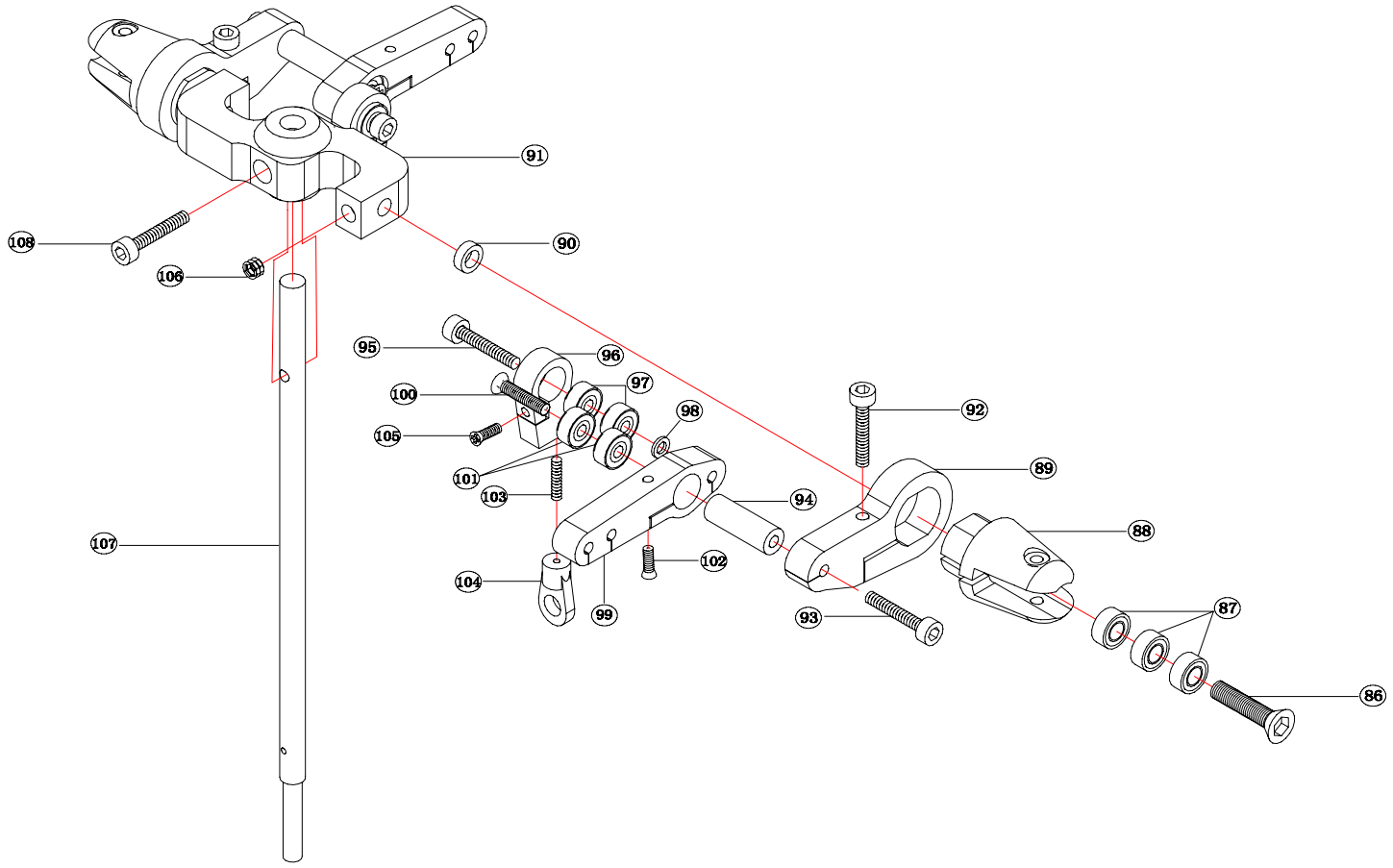

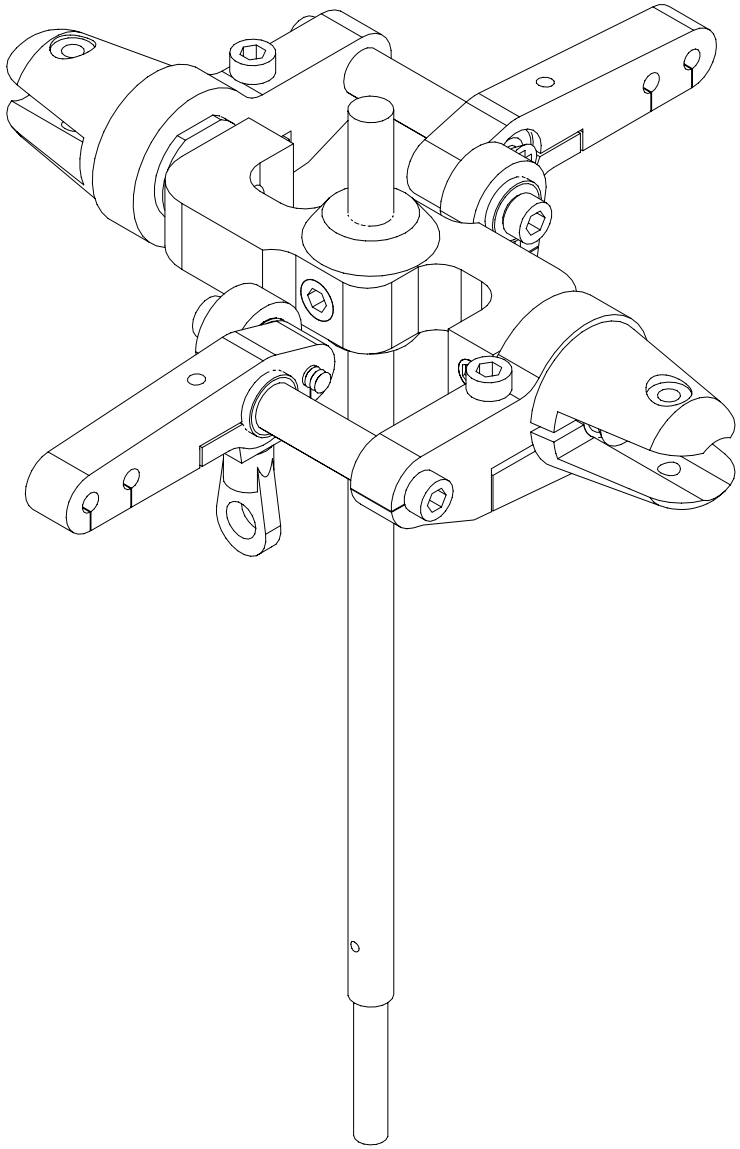

NO.	part No	Discription	Q'TY	Specification	No	part No	Discription	Q'TY	Specification
109	PL1009T	Adjustable ball link	2	H17.5mm	117	TB0025	Flybar linkage ball	2	
110	HS1005	Linkage rod	2	Ø1.6×10mm	118	SJ20007	Set screw	4	M2×2mm
111	SJ70002	Nut	2	M1.6	119	CO1001	Copper ingot	2	
112	AL3004	Mixing linkage rod subassembly	2		120	SJ20007	Set screw	2	M2×2mm
113	SJ20005	Cap screw	2	M2×10mm	121	PL1007	Playbar paddel	2	M1.6×7mm
114	SJ10010	Bearing	4	Ø2×Ø6×2.5mm	122	PL1008T	Adjustable ball link	2	H13.5mm
115	AL3036	Underlay	2	Ø2×Ø3.5×0.5mm	123	HS1005	Linkage rod	2	Ø1.5×35mm
116	SJ40001	Round head screw	2	M1.6×6mm	124	PL1010	Ball link	2	H11mm

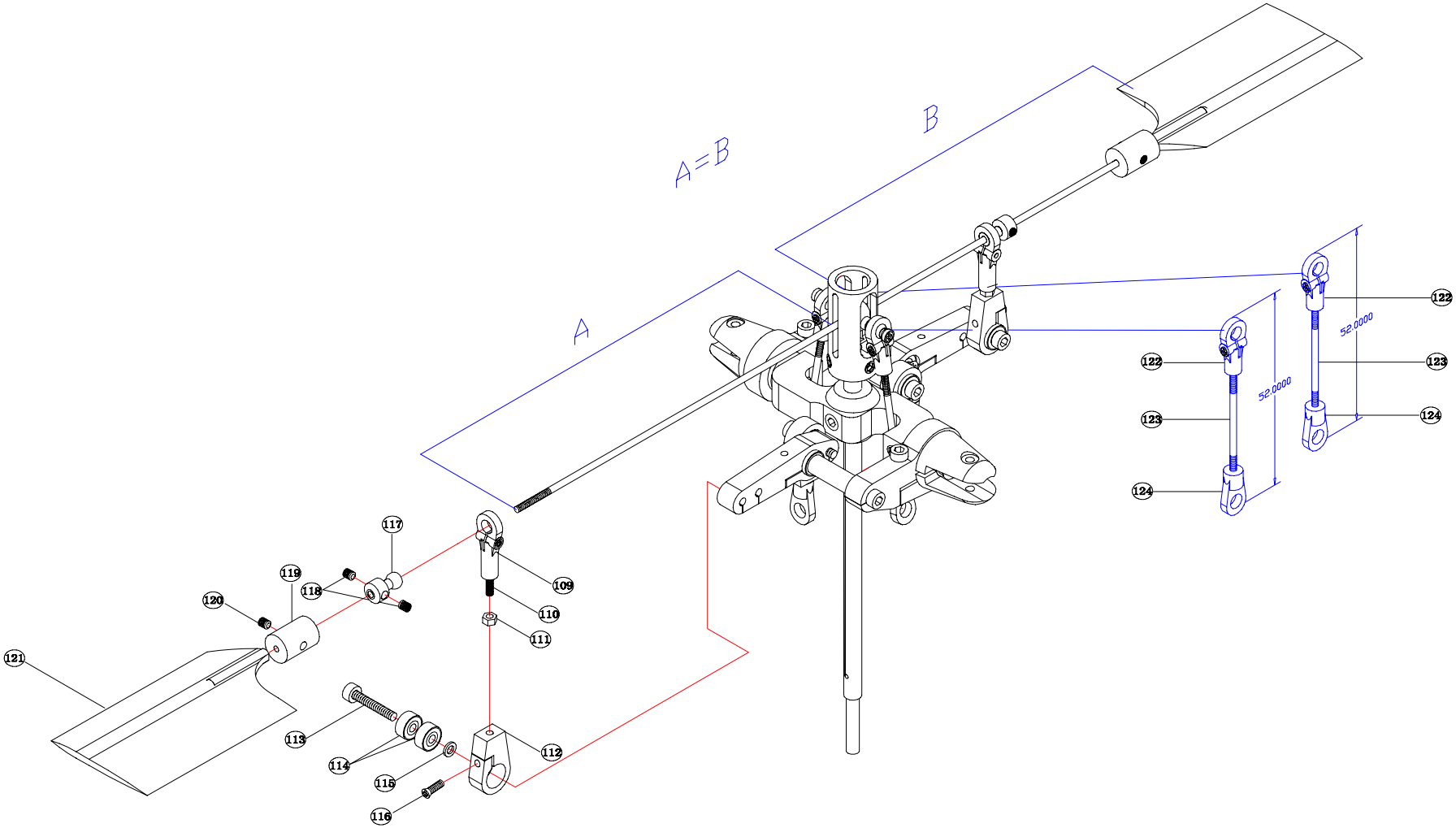

NO.	part No	Discription	Q'TY	Specification	No	part No	Discription	Q'TY	Specification
125	AL3014	swash plate	1		129	AL1039	ball link	3	
126	SJ30002	countersunk screw	4	Ø1.6×6mm	130	AL3014	swash plate washer	3	Ø2×Ø4×8mm
127	AL1039	ball link	4		131	SJ30002	countersunk screw	1	Ø1.6×6mm
128	SJ20006	cap screw	3	M2×16mm	132	AL1039	ball link	1	

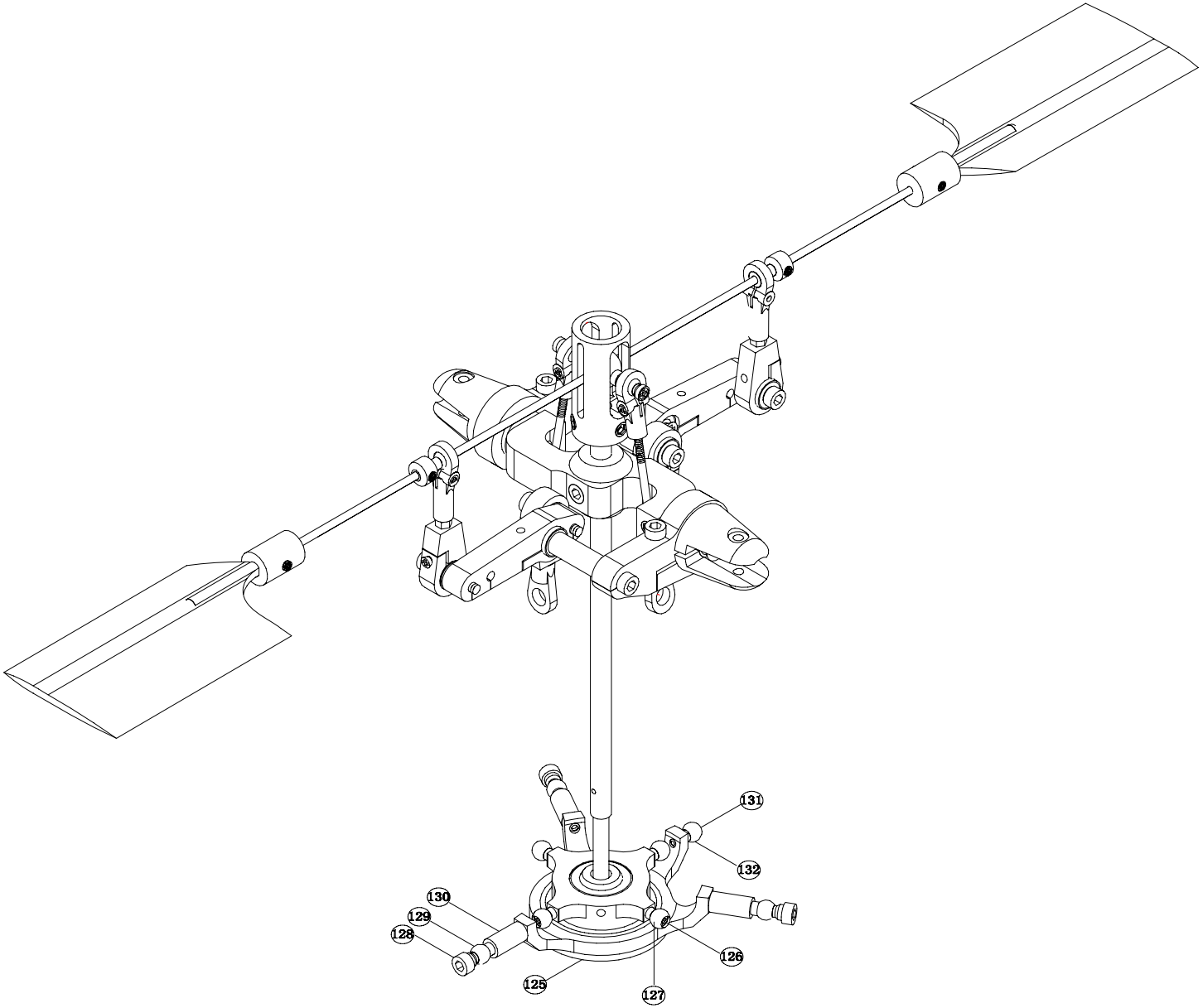

NO.	part No	Discription	Q'TY	Specification	No	part No	Discription	Q'TY	Specification
133	AL1040	Main shaft fixing	1		138	AL3005	Main shaft stand	1	
134	SJ20007	Set screw	2	M2×2mm	139	SJ10003	Bearing	1	Ø4×Ø7×2.5mm
135	SJ10003	Bearing	1	Ø4×Ø7×2.5mm	140	AL2035	Main shaft fixing (underside)	1	
136	AL3002	Up servo mount	1		141	SJ20007	Set screw	2	M2×2mm
137	AL3001	Swash plate fixing set	1						

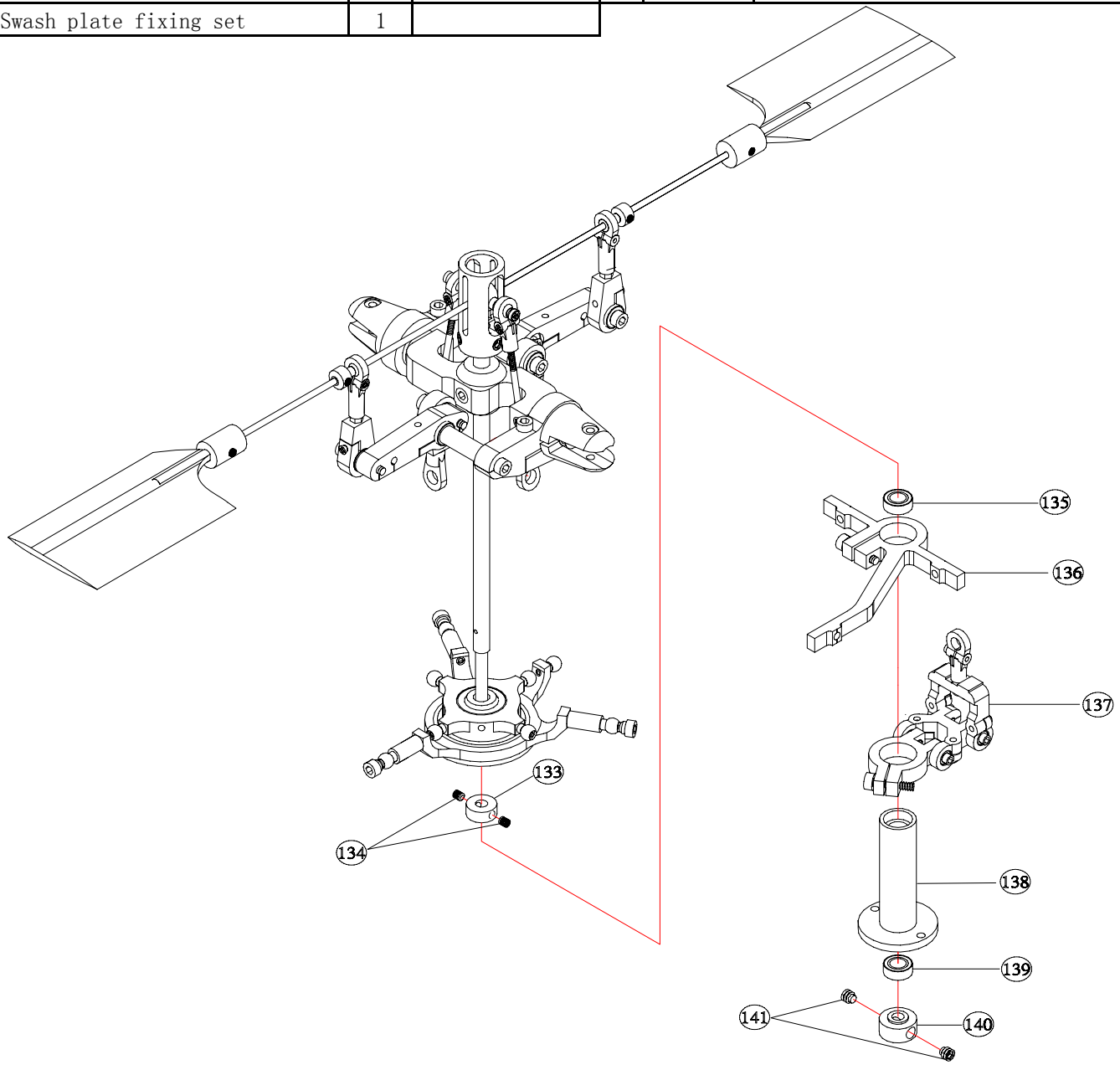

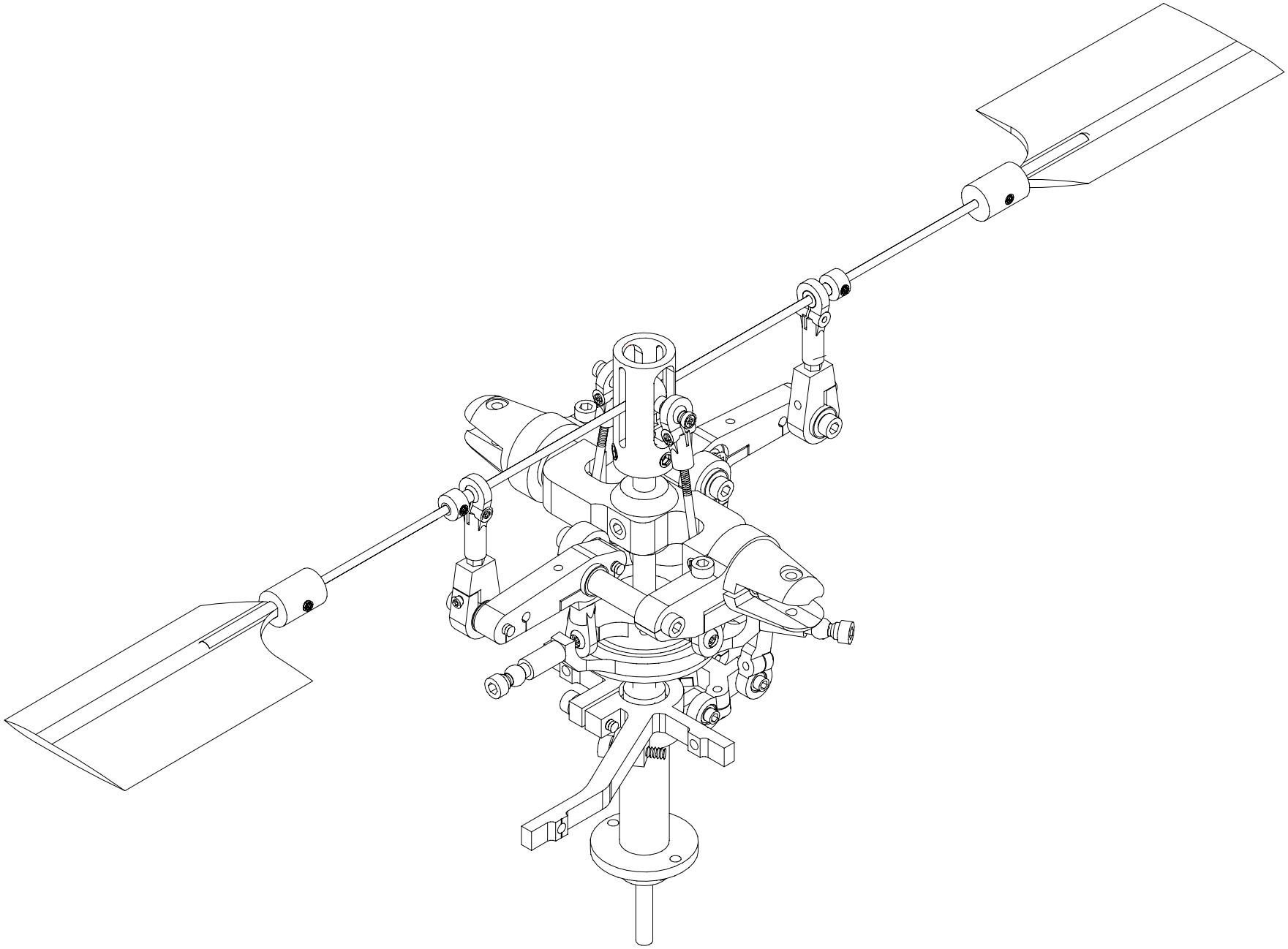

NO.	part No	Discription	Q'TY	Specification	No	part No	Discription	Q'TY	Specification
142	FG3001-F/C	Fiberglasslateral (F) / Carbonfiber (C) board over main frame	1		152	AL3029	Canopy device	4	
					153	SJ20003	Cap screw	4	M2×5mm
143	AL3003	Down servo mount	1		154	AL3031	Battery board front link	2	
144	SJ20003	Cap screw	2	M2×5mm	155	SJ20003	Cap screw	2	M2×5mm
145	SJ20004	Cap screw	2	M2×8mm	156	SJ20003	Cap screw	4	M2×5mm
146	AL3030	Feathering shaft screw	2		157	AL3032	Landing skid link	4	
147	AL3034	Front frame board washer	2	Ø2×Ø4.5×15mm	158	SJ20003	Cap screw	4	M2×5mm
148	SJ20003	Cap screw	2	M2×5mm	159	FG3003-F/C	Fiberglasslateral (F) / Carbonfiber (C) landing skid link	2	
149	AL3033	Back frame board washer							
150	FG3006-F/C	Fiberglasslateral (F) / Carbonfiber (C) battery board	1		160	SJ20003	Cap screw	4	M2×5mm
					161	SJ20012	Cap screw	2	M2×4mm
151	SJ20003	Cap screw	8	M2×5mm	162	SJ20012	Cap screw	2	M2×4mm

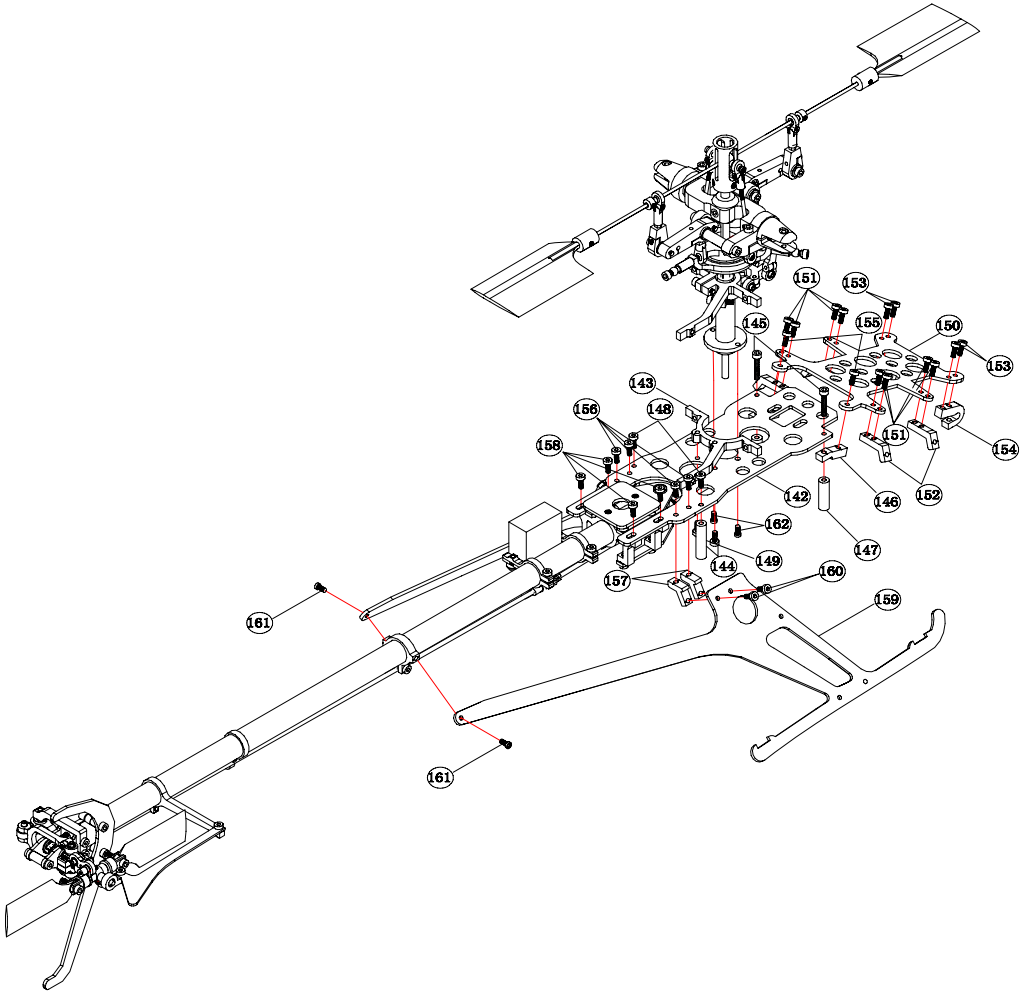

NO.	part No	Discription	Q'TY	Specification	No	part No	Discription	Q'TY	Specification
163	AL3026	One-way bearing stand	1		166	SJ10009	Bearing	1	Ø3×Ø7×2mm
164	SJ10008	Bearing	1	Ø3×Ø6×2.5mm	167	PL1005	Main drive gaer	1	
165	SJ10001	One-way bearing	1	Ø3×Ø6.5×6mm	168	SJ30004	Countersuk screw	2	M2×6mm

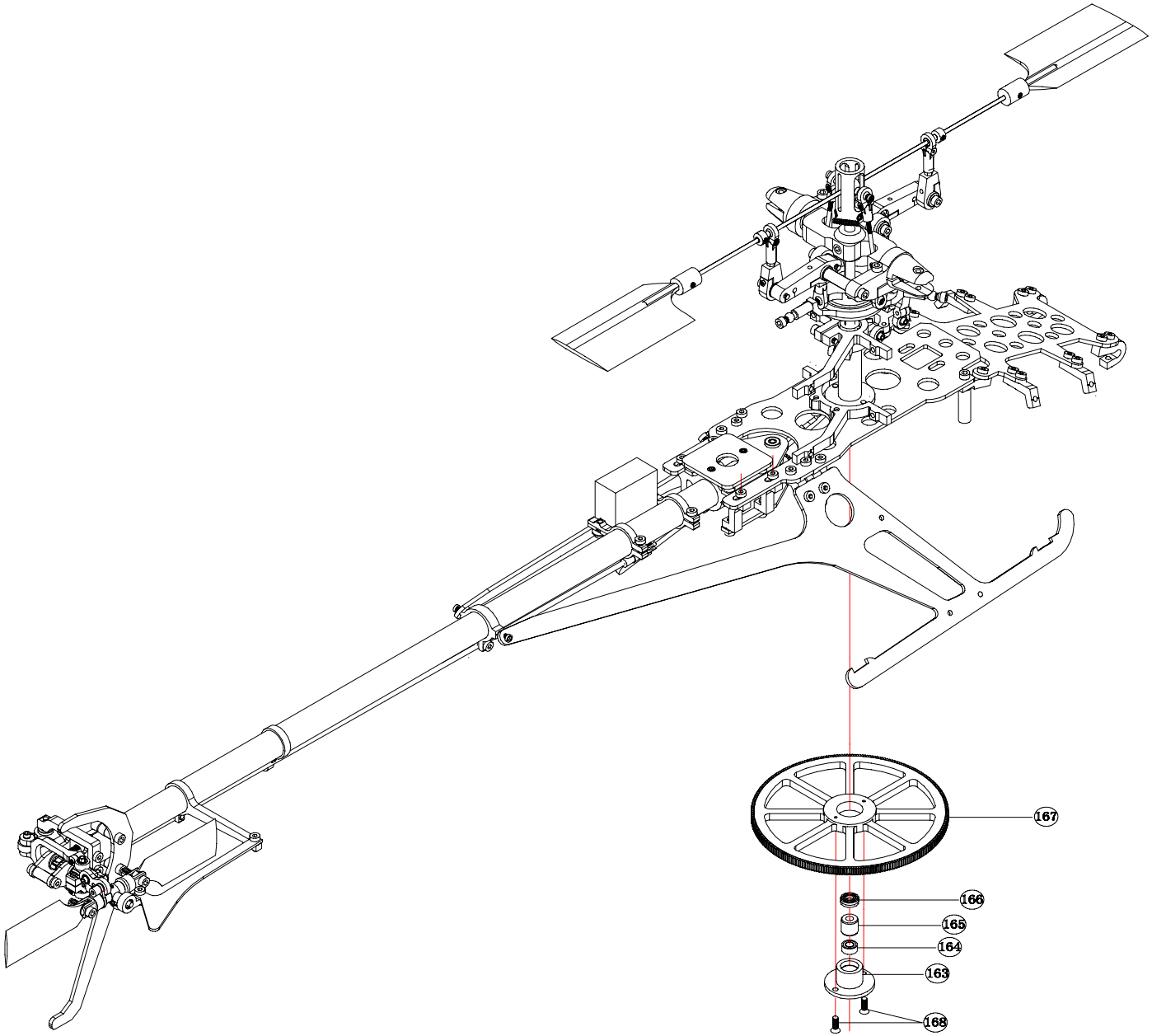

NO.	part No	Discription	Q'TY	Specification	No	part No	Discription	Q'TY	Specification
169	AL3036	Underlay	1	M3	178	AL3035	Down front board washer	2	Ø2×Ø4×10mm
170	AL3027	Bearing tand under main shaft	1		179	SJ20003	Cap screw	4	M2×5mm
171	SJ10008	Bearing	1	Ø3×Ø6×2.5mm	180	SJ20005	Cap screw	2	M2×10mm
172	FG3002-F/C	Fiberglasslateral (F) / Carbonfiber (C) board under main frame	1		181	FG3010-F/C	Fiberglasslateral (F) / Carbonfiber (C) strengthen landing skid board-2	2	
173	SJ30009	Countersuk screw	2	M2×3mm	182	SJ70002	Nut	2	M2
174	AL3028	Beam	1		183	SJ20004	Cap screw	2	M2×8mm
175	SJ20003	Cap screw	2	M2×5mm	184	FG3009-F/C	Fiberglasslateral (F) / Carbonfiber (C) strengthen landing skid board-1	2	
176	SJ20006	Cap screw	2	M2×16mm					
177	FG3005-F/C	Fiberglasslateral (F) / Carbonfiber (C) dowm-front board	2		185	SJ20003	Cap screw	4	M2×5mm
					186	SJ70002	Nut	4	M2

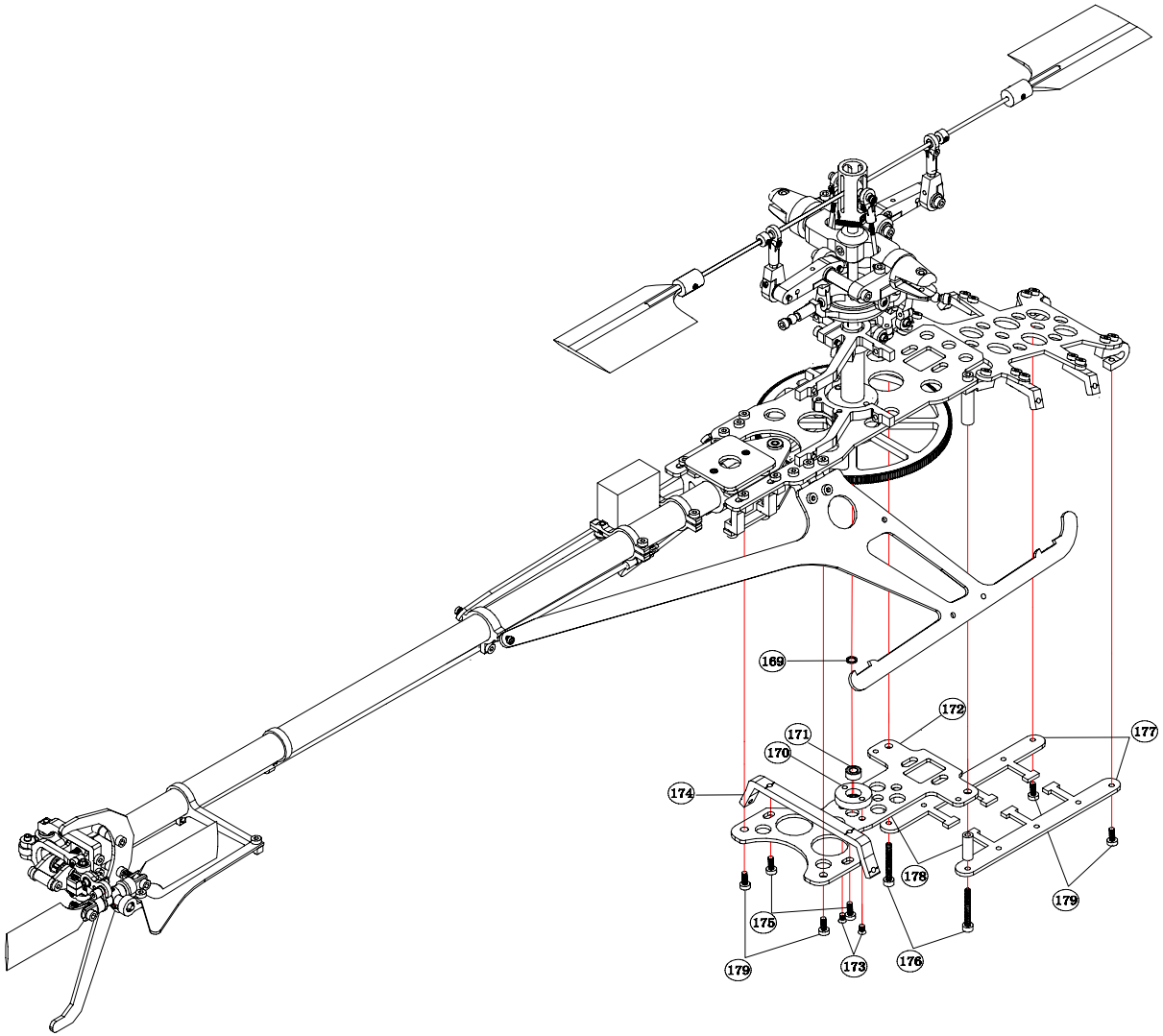

NO.	part No	Discription	Q'TY	Specification	No	part No	Discription	Q'TY	Specification
187	CF2001	Carbonfiber main blade	2		189	SJ70001	Nut	2	M2
188	SJ20011	Cap screw	2	M2×12mm					

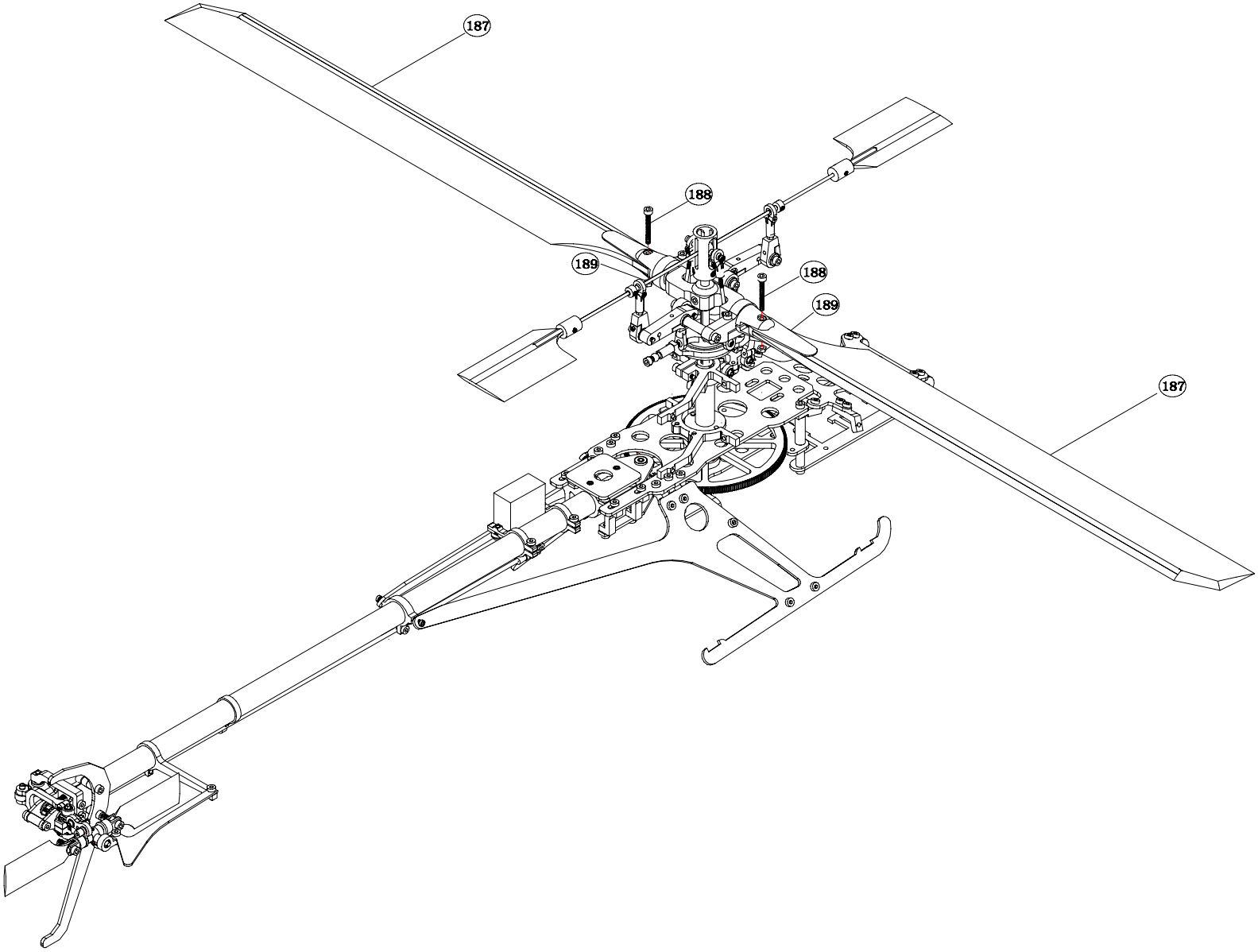

Wiring diagram

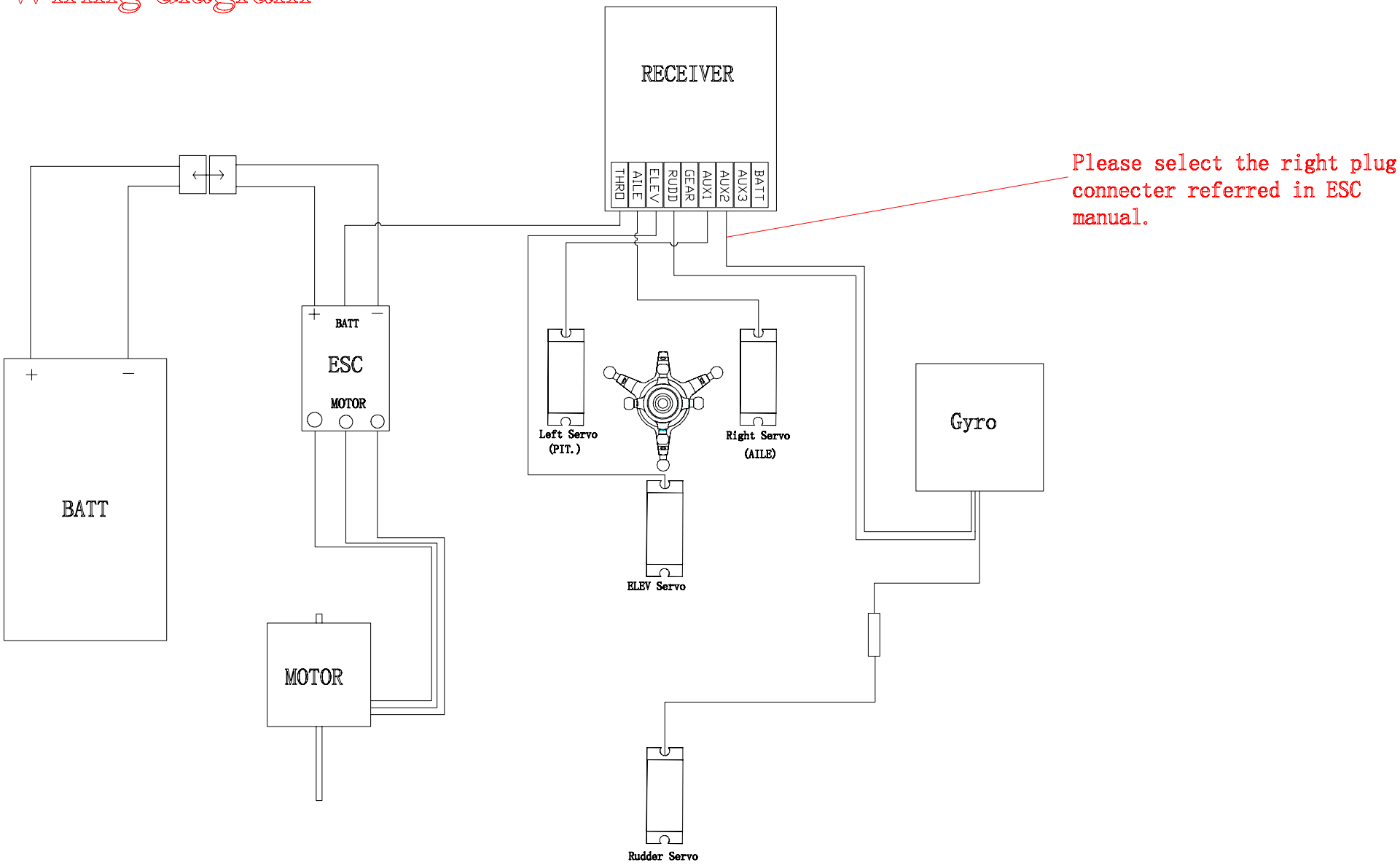

The setting of transmitter and servo

Ⅰ 1). Unplug the motor's tie-in before switching on the electricity to ensure the motor will not work after electrifying.
2). Demount the four servo arms.

Ⅱ Switch on the transmitter, and choose the ccpm120 mode.

(SWASH TYP)

3servos

120°

Ⅲ Switch on the transmitter and the heli's battery electricity. Don't move the heli until the gyro opening program is finished. And then turn off the electricity. Then, the servo is in its central position

Ⅳ Join the servo arms and the linkage rods. Move the servo mount to (1) Make sure the angle between the linkage rod and servo arm is 90 degree (2) Make sure the angle between the linkage and the angle-adjusting device is 90 degree.
(3) Make sure the tail rotor is in such a state, where the angle of attack of the balancing counterforce is 3-5 degree (that is, when the tail rotor is rotating, the thrust of the tail rotor and the main rotor's rotating are in the same direction) Please refer to the illustration one and two.

Ⅴ Turn on the transmitter, and the electricity on the heli.(before the adjustment has been finished, do not wire the motor. Switch on the servos.
(1) Check whether the right and left tail blades are at the same angle. You can move central connecter of tail rotor to adjust them at the same angle (after this, you should repeat all the actions in the last steps to make the joints at 90 degree). (2)when push the servo to its full capability, you must leave some space in the tail-adjusting device(otherwise, it can not work normally and life span will be reduced). And adjust the flying capacity on the gyro and transmitter.

Ⅵ Switch on the transmitter and the heli's electricity, push the gun in the center (PIT.50%) .Fix the 3 ccpm servo arms according to the page of linkage rod adjustment and the explanation, and keep the servo arm level and the linkage rod 90 degree with it.

Ⅶ Set up the main rotor, push the gun in the center position, switch on the transmitter and then the electricity of the heli, after that, set the screw distance and select the proper gun position.

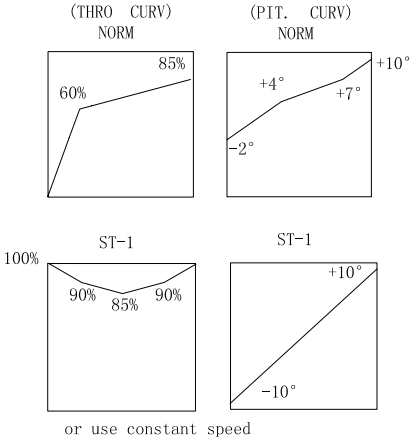

or use constant speed

when measuring the main rotor's screw distance, make sure the consistency on the both sides.(You can adjust it with screw distance linkage rod)

Ⅷ Find the most proper locked angle of the tail rotor. Wire the motor before switching on the electricity, then switch on the transmitter and select the right plug connecter of gyro under 49 %(in the unlocked mode)

(GYRO SENS)
RUDD D/R

Rate:
0:40%

push the gun to the lowest position, and switch on the electricity in a safe place. Keep the heli a safe enough distance from people, then start to test the flying with hanging in a height of about 1 meter in the air, and constantly readjust the angle of the tail rotor blades, until the heli can hang in the air itself without adjusting the rudder. After the heli lands on, turn off the electricity on the heli, and lock the gyro to the locked mode as

Rate:
0:74~76
1:65~75

Then switch on the battery electricity again. After the gyro finishes the opening program, you can then have a complete test of the heli(to lock the mode you must switch on the electricity again)

Power System:

1) The motor and the ESC need matching test. Please choose our motors and ESC. In the NORM condition, the highest speed of the main rotor of the SJM400 Pro is 2200~2600rpm; in the ST-1 condition, it is 2800~3200rpm.

2) Through gear decelerating structure, the motor can make the main rotor rotate. You can choose 10T, 12T, 14T motor copper gears (attached to the kit) to change the decelerating speed. (SJM400 PRO ' s main rotor gear is 180T)

V (battery voltage) × Kv (motor rev /v of)× the number of motor' s teeth÷180(main rotor gear) = the rev of the main rotor

3) Our ESC (25A / 30A, BEC3A) can be matched with .3s 11.1V and 4s 14.8V Li-battery.

4) Please use (3s) 11.1V, 1300~2000mAH, and over 12c Li-battery.

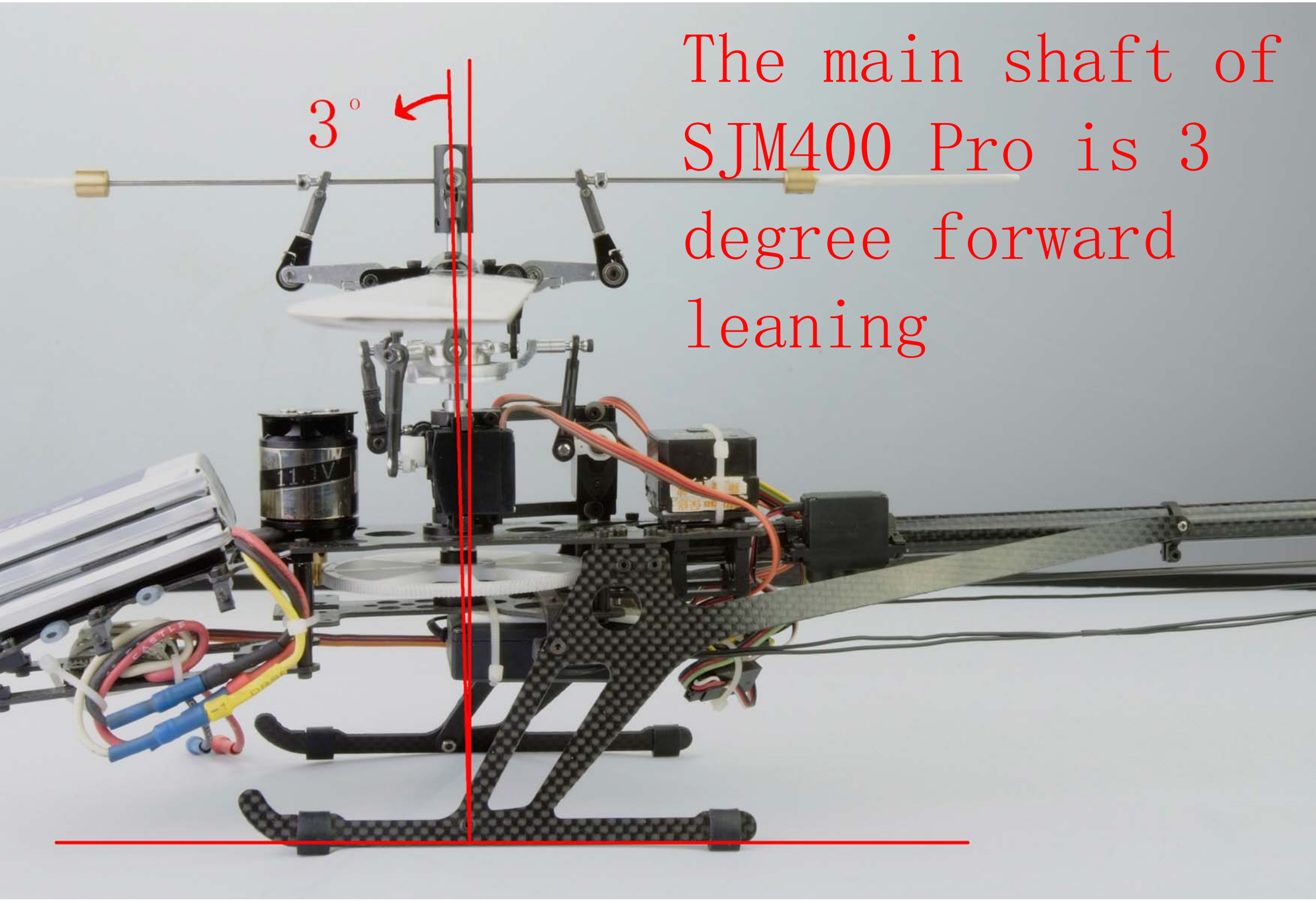
3°
The main shaft of SJM400 Pro is 3 degree forward leaning
11.1V

The main shaft of SJM400 Pro is 3 degree forward leaning

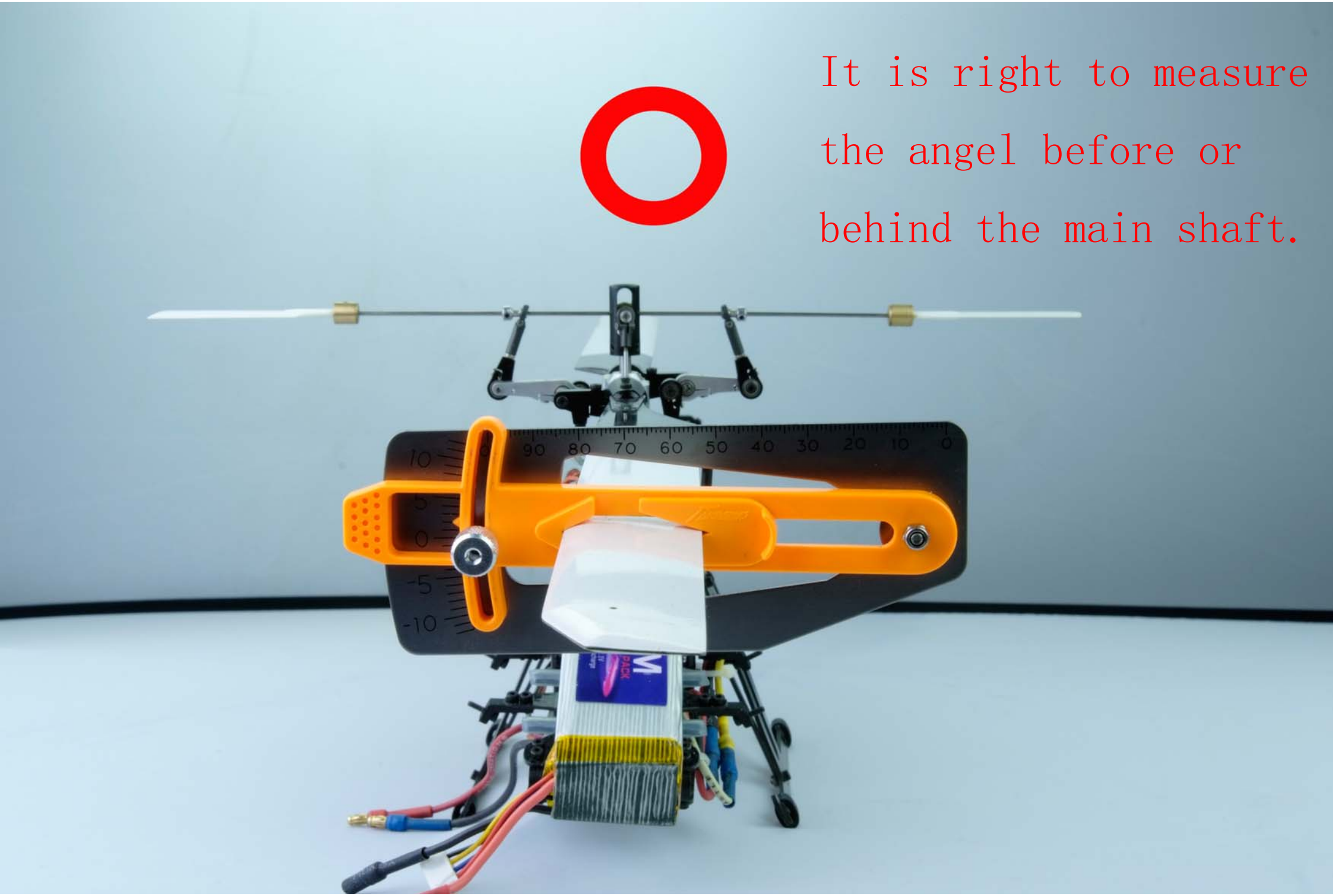
It is right to measure
the angel before or
behind the main shaft.

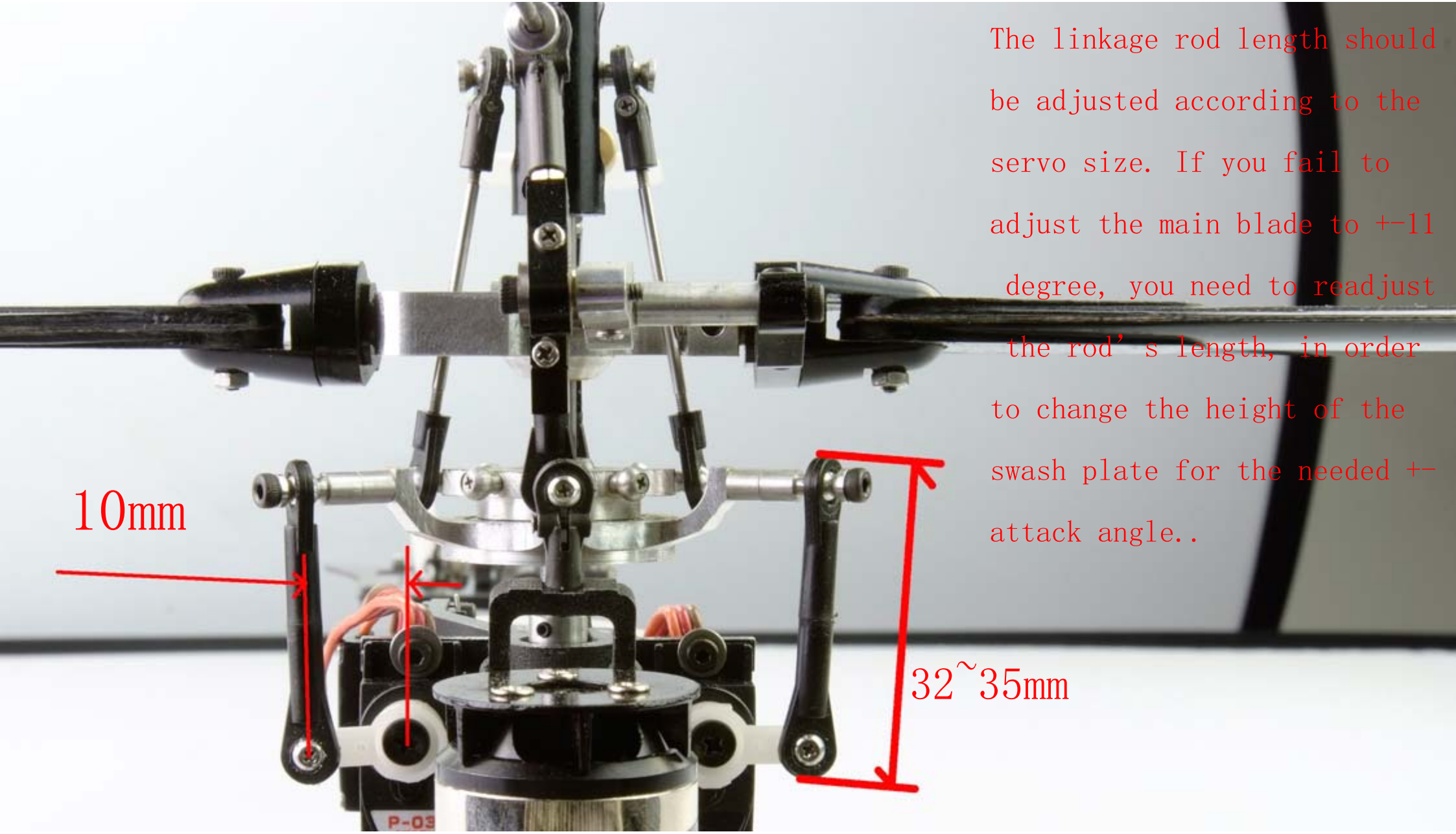

The linkage rod length should be adjusted according to the servo size. If you fail to adjust the main blade to +-11 degree, you need to readjust the rod’s length, in order to change the height of the swash plate for the needed +- attack angle..

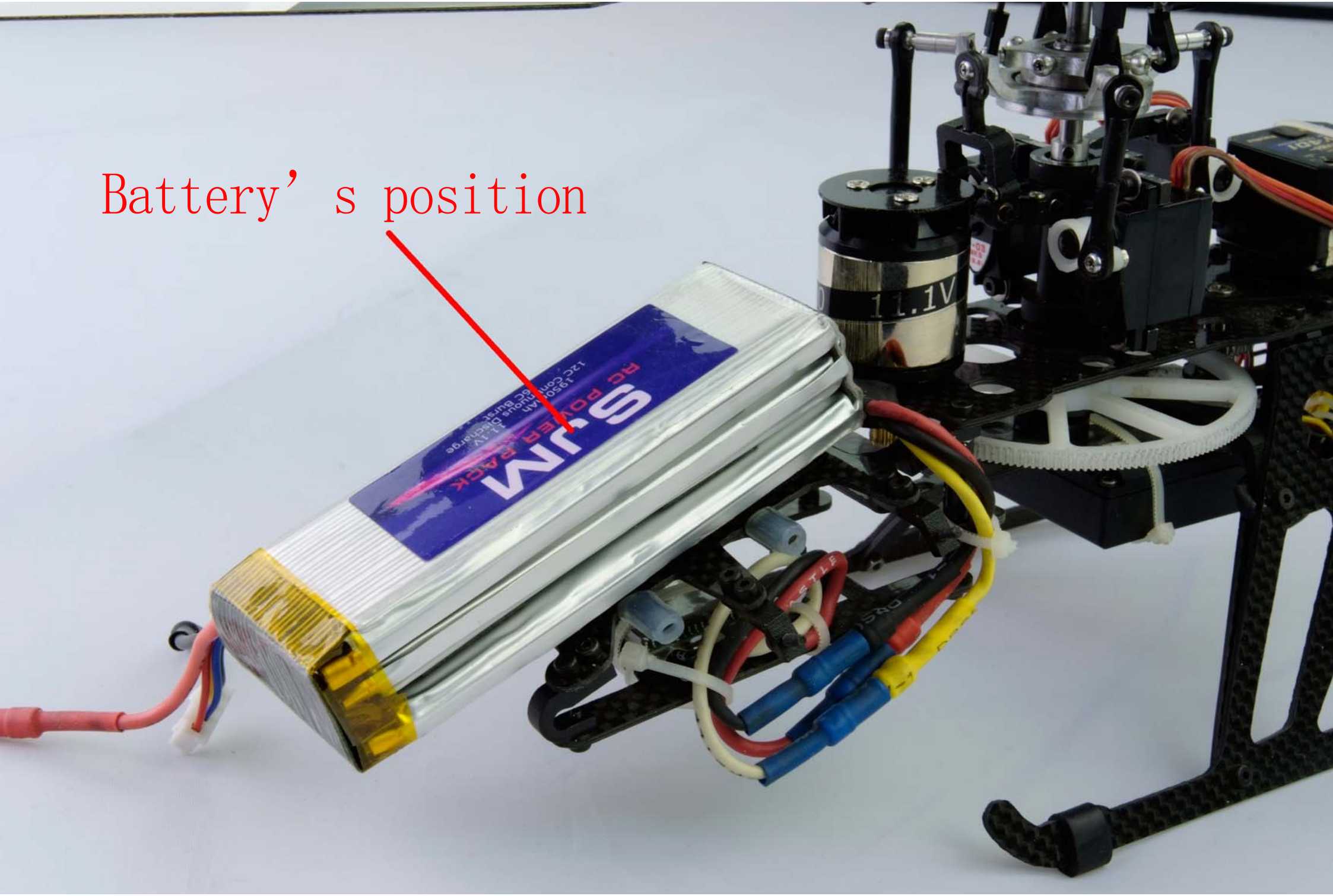
Battery’s position
11.1V
S-JM
RC POWER PACK

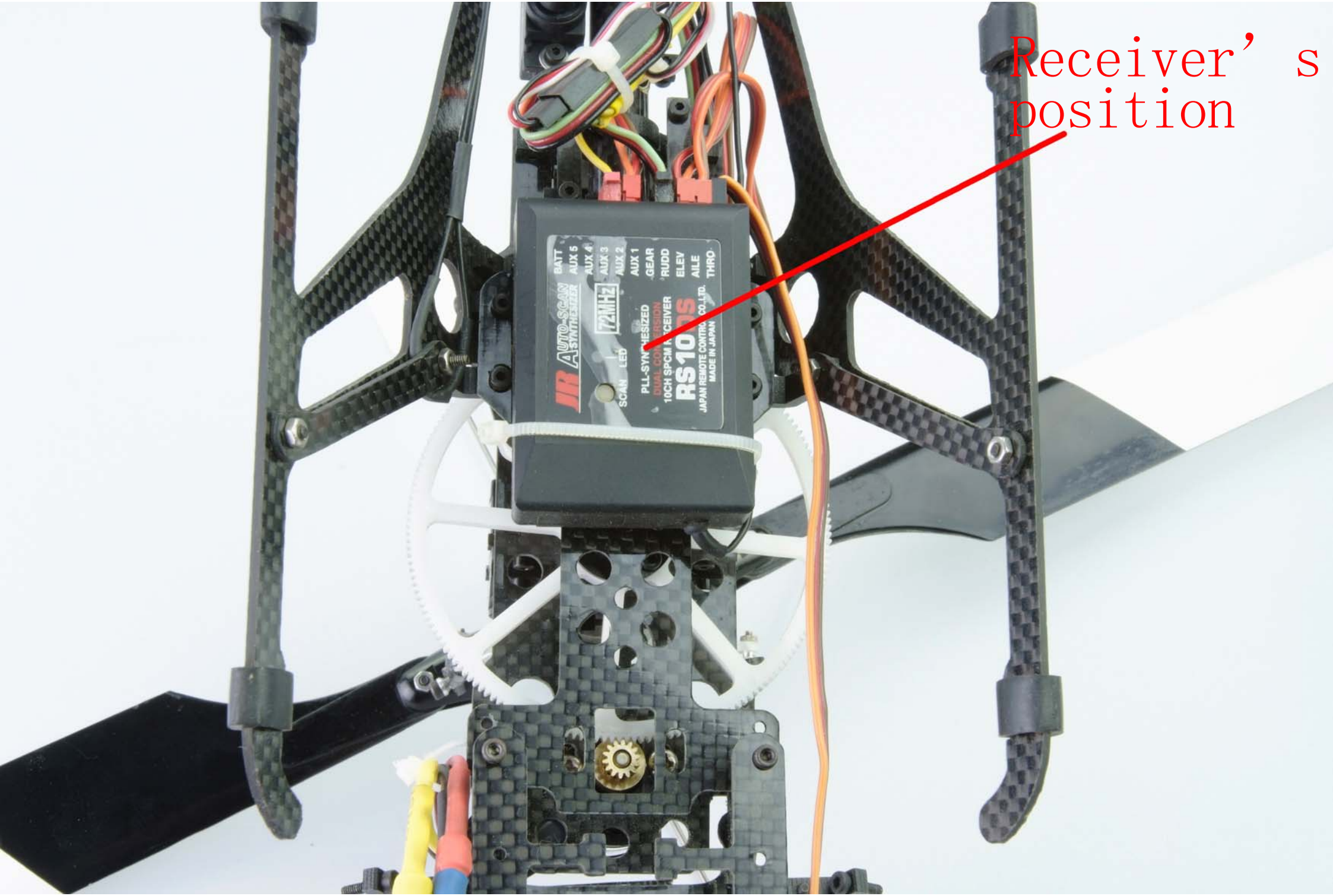
Receiver’ s position
JR
AUTO-SCAN
SYNTHESIZER
72MHz
SCAN
LED
BATT
AUX 5
AUX 4
AUX 3
AUX 2
AUX 1
GEAR
RUDD
ELEV
AILE
THRO
PLL-SYNTHESIZED
DUAL CONVERSION
10CH SPCM RECEIVER
RS10
JAPAN REMOTE CONTROL CO.,LTD.
MADE IN JAPAN

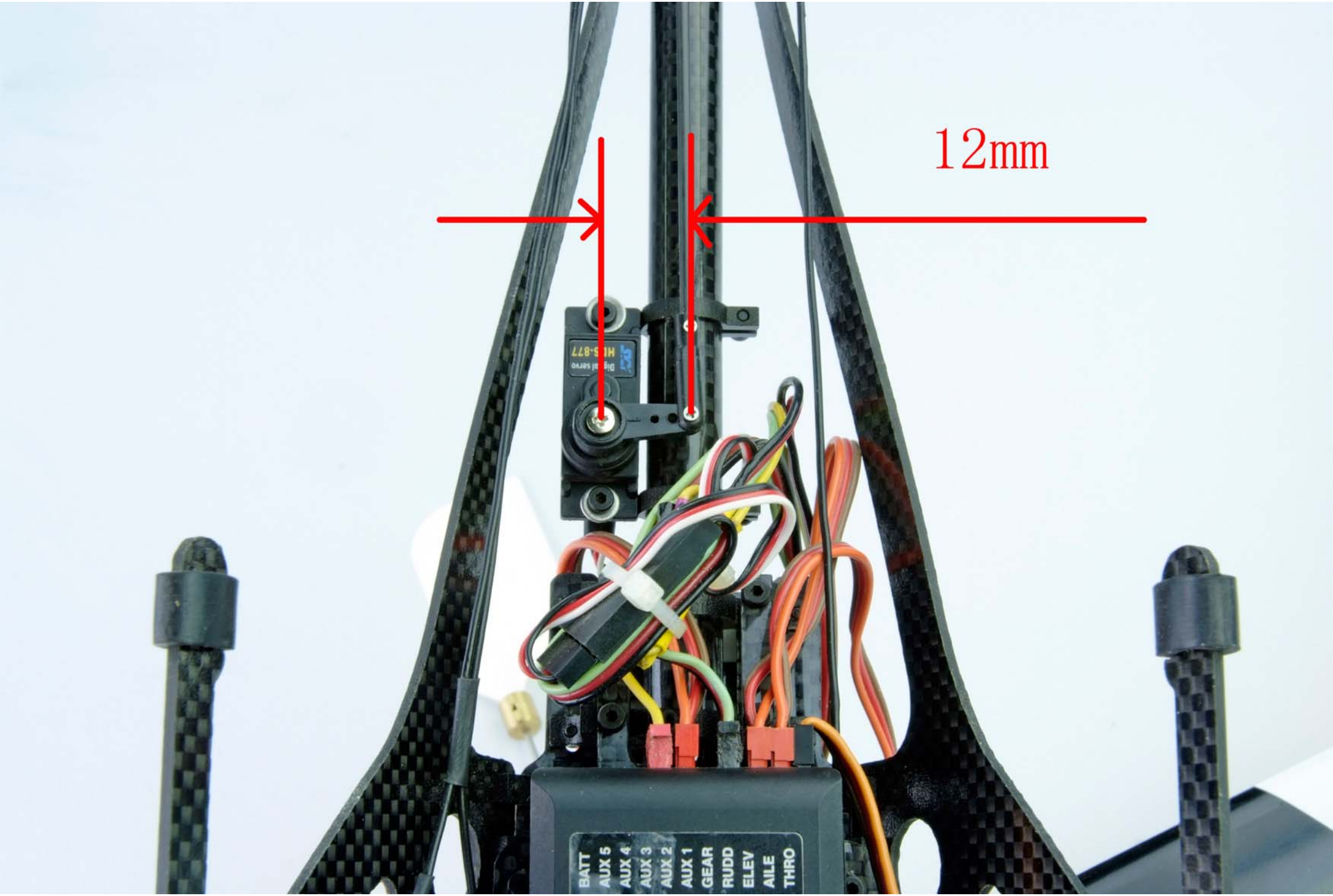
12mm
BATT
AUX 5
AUX 4
AUX 3
AUX 2
AUX 1
GEAR
RUDD
ELEV
AILE
THRO

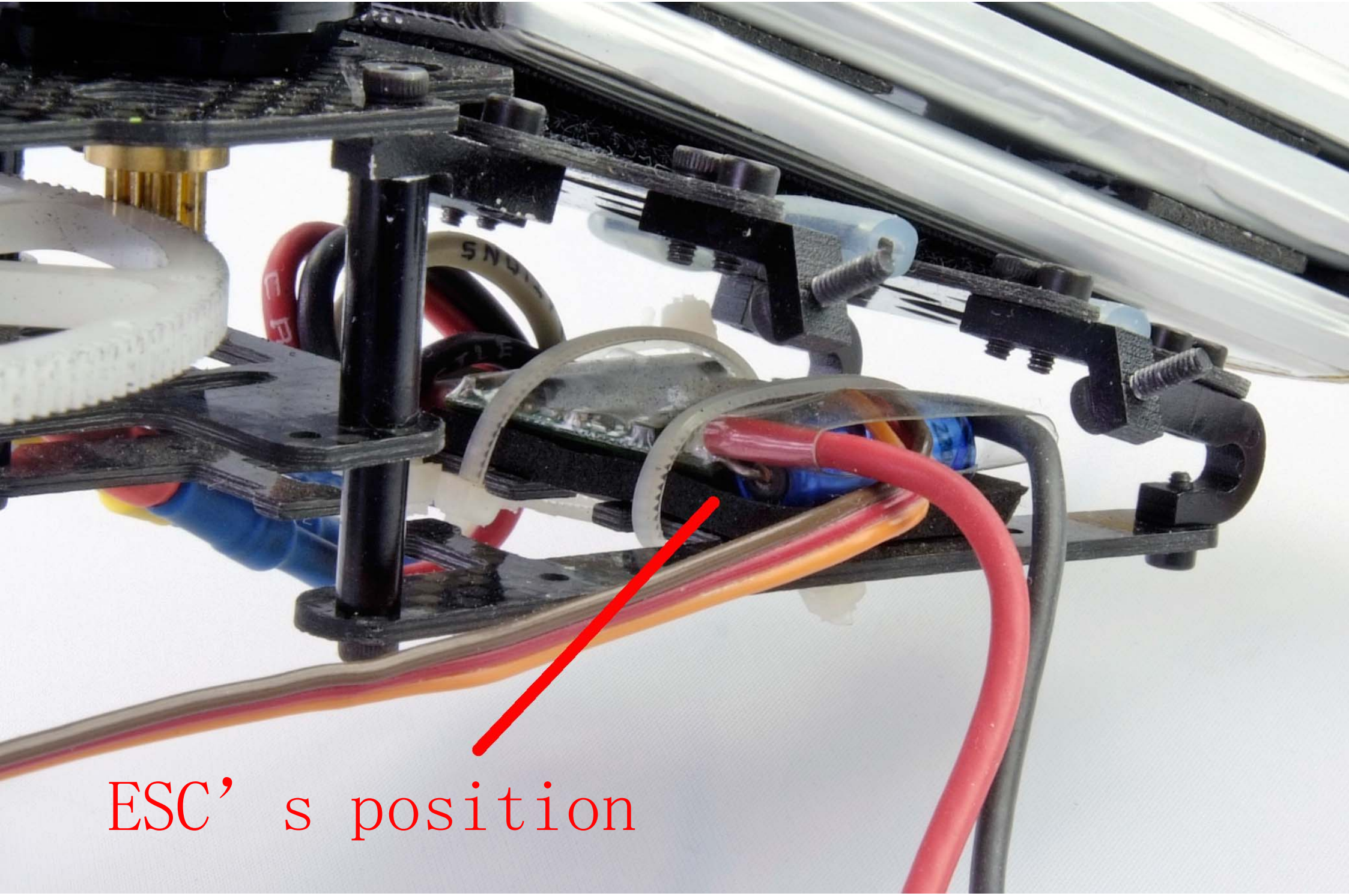
ESC’s position

Gyro’ s position

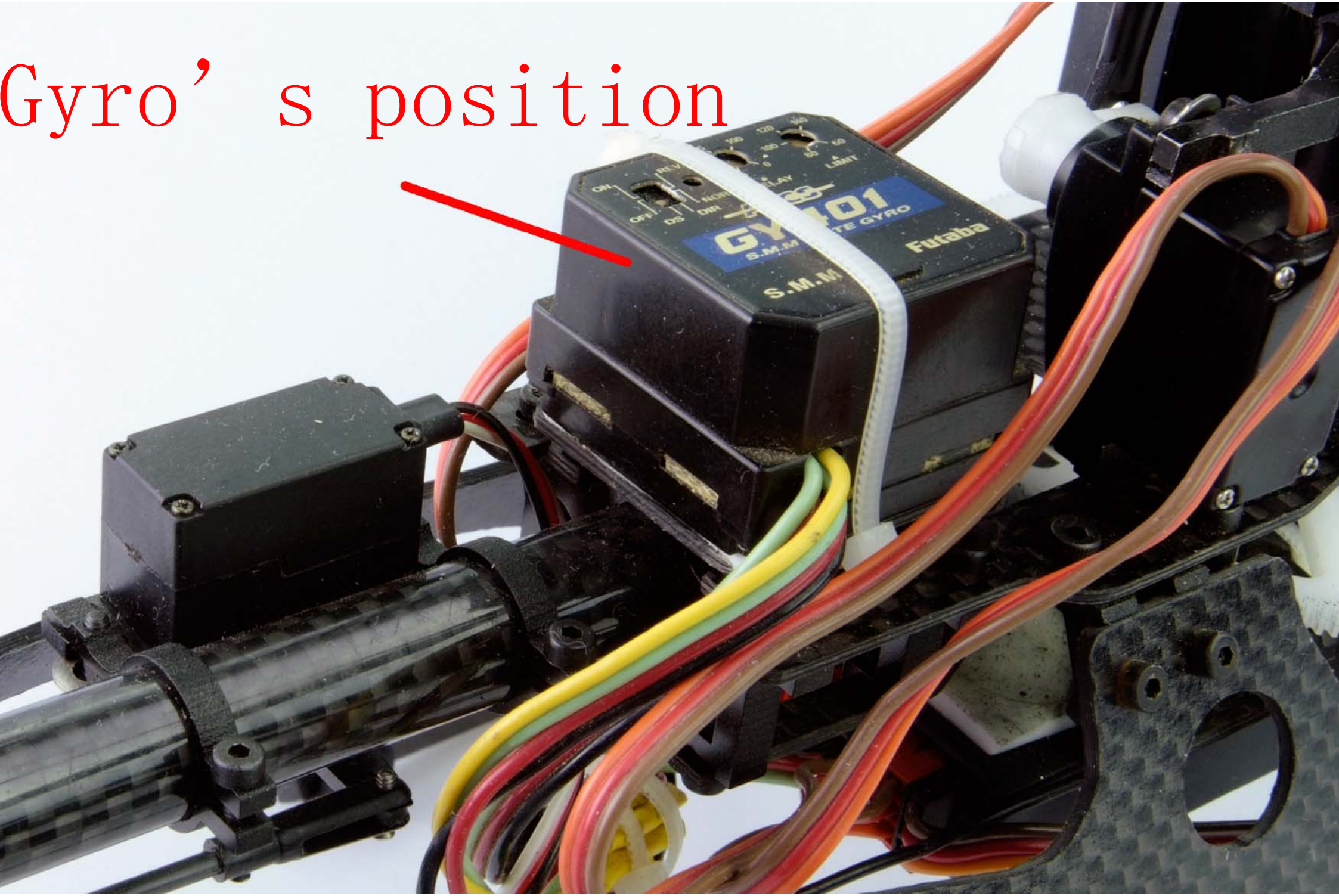

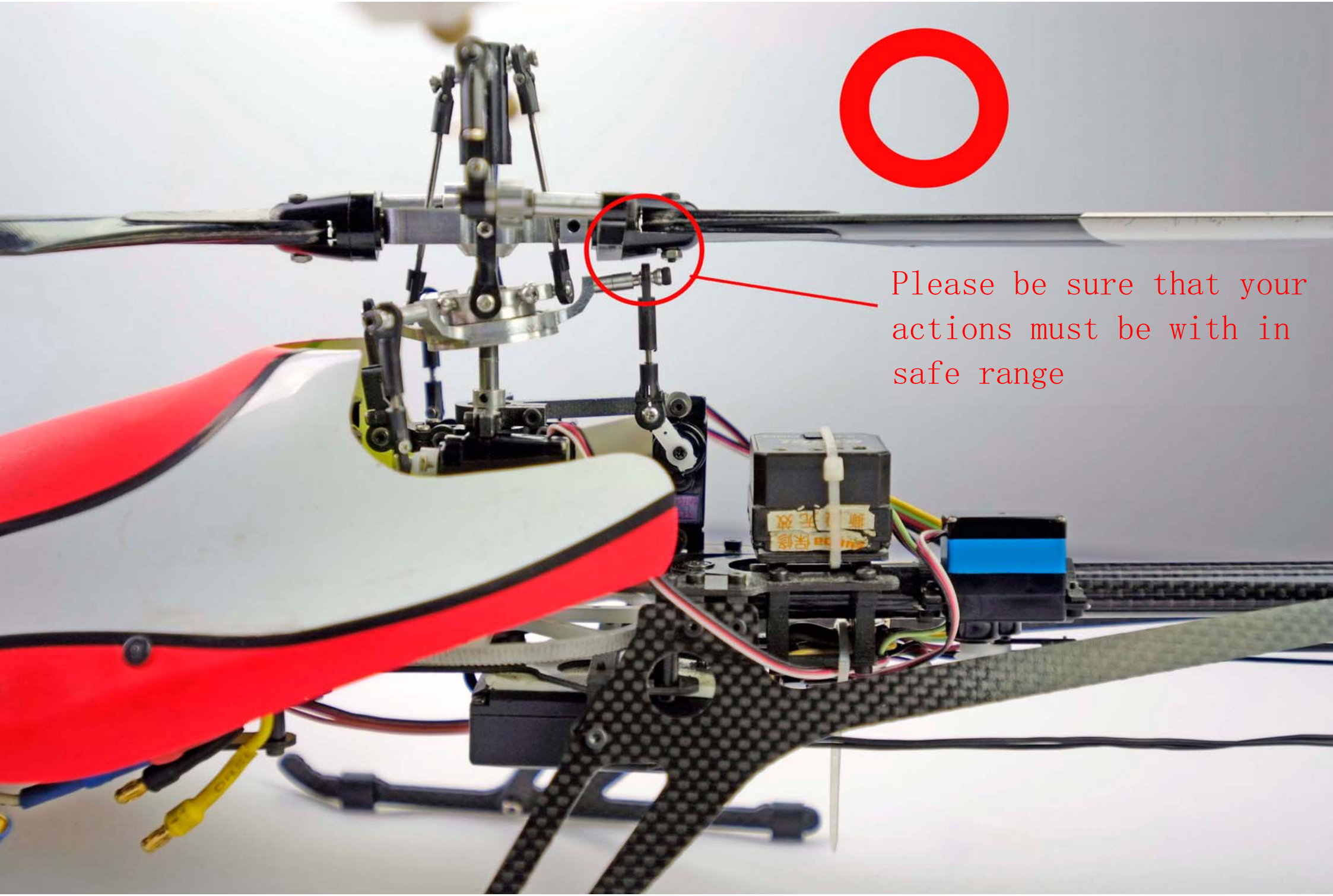
Please be sure that your
actions must be with in
safe range

OPTIONAL SPARE PARTS

Swash late fixing set AL3001	Up servo mount AL3002	Down servo mount AL3003	Flybar mixing arm set subassembly AL3004	Main shaft stand AL3005	Tail boom link AL3006	Main blade clincher AL3007	Main blade clincher arm AL3008	Main blade clincher link AL3009
Main blade clincher center AL3010	Flybar stand AL3011	Flybar copper ball AL3012	Mixing arm AL3013	Swash plate AL3014	Tail angel adjusting set AL3015	Sliding shaft set AL3016	Tail unit housing AL3017	Tail angel adjusting joint AL3018
Tail blade clincher AL3019	Tail blade center AL3020	Tail shaft bearing stand AL3021	Tail servo mount AL3022	Tail boom support AL3023	Connecting rod rest AL3024	Level blade bracket AL3025	One-way bearing stand AL3026	Bearing tand under main shaft AL3027
Beam AL3028	Canopy device AL3029	Battery board link AL3030	Battery board front link AL3031	Landing skid link AL3032	Back frame board washer Ø2×Ø4.5×18 AL3033	Front frame board washer Ø2×Ø4.5×15 AL3034	Downm front board washer Ø2×Ø4×10 AL3035	Underlay AL3036
Linkage ball safety bottom AL3037	Linkage ball AL1039	Main shaft fixing AL1040	Main shaft fixing (underside) AL2035	Flybar linkage ball TB0025	Screw cap AL2042	FG board over main frame FG3001-F	CF board over main frame FG3001-C	FG board under main frame FG3002-F
CF board under main frame FG3002-C	FG landing skid FG3003-F	CF landing skid FG3003-C	FG vertical parallel blade FG3004-F	CF vertical parallel blade FG3004-C	FG downm-front board FG3005-F	CF downm-front board FG3005-C	FG battery board FG3006-F	CF battery board FG3006-C
FG lever labde FG3007-F	CF lever labde FG3007-C	FG gyro blade FG3008-F	CF gyro blade FG3008-C	FG strengthen landing skid board-1 FG3009-F	CF strengthen landing skid board-1 FG3009-C	FG strengthen landing skid board-2 FG3010-F	CF strengthen landing skid board-2 FG3010-C	FG tail unit housing board FG3011-F
CF tail unit housing board FG3011-C	FG tail unit housing gear board FG3012-F	CF tail unit housing gear board FG3012-C	Flybar rod HS1001	Main shaft HS1002	Feathering shaft screw M3×16mm HS3003	Stainless steel wahser HS3004	Lingkage rod HS1005	Tail shaft belt gear HS3006
Lingkage rod HS1007	Front shaft belt gear HS3008	Belt DB1001	Canopy PL3001	Canopy(Finished) PL3002	Tail drive gear set PL2003	Main drive gaer PL1005	Tail blade PL1006	Flybar paddle PL1007
Ball link H13.5 PL1008	Adjustable ball link H13.5 PL1008T	Ball link H17.5 PL1009	Adjustable ball link H17.5 PL1009T	Ball link H11 PL1010	Servo link H17 PL1011	Servo link H15 PL1012	Blade holder PL1015	FG main blade CF2001
Tail servo link CF2002	CF tial boom CF2003	ALU tail boom AL2044	Copper ingot CO1001	(hole diameter3.17,14T) Motor gear CO3004	One-way bearing 3×6.5×6 SJ10001	Bearing 4×7×2.5 SJ10003	Flange bearing 2×6×2.5 SJ10005	Bearing 3×6×2 SJ10006
Bearing 1.5×4×2 SJ10007	Bearing 3×6×2.5 SJ10008	Bearing 3×7×2 SJ10009	Bearing 2×6×2.5 SJ10010	Cap screw M1.5×4 SJ20001	Cap screw M1.5×7 SJ20002	Cap screw M2×5 SJ20003	Cap screw M2×8 SJ20004	Cap screw M2×10 SJ20005
Cap screw M2×16 SJ20006	Set screw M2×2 SJ20007	Set screw M3×3 SJ20009	Cap screw M2×12 SJ20011	Cap screw M2×4 SJ20012	Countersuk screw M1.6×4 SJ30001	Countersuk screw M1.6×6 SJ30002	Countersuk screw M1.6×8 SJ30003	Countersuk screw M2×6 SJ30004
Countersuk screw M2×8 SJ30005	Countersuk screw M1.6×10 SJ30006	Countersuk screw M1.6×5 SJ30007	Countersuk screw M2×3 SJ30009	Round head screw M1.6×6 SJ40001	Round head screw M1.6×4 SJ40002	Nut M2 SJ70001	Nut M1.6 SJ70002	Motor
Battery	Main drive gear unloader T1001	High-speed steel cap wrench T1004	Flybar rod set AL3043	Screw group GP2001				