ファルコンスリーエイト

FALCON 888

HIROBO

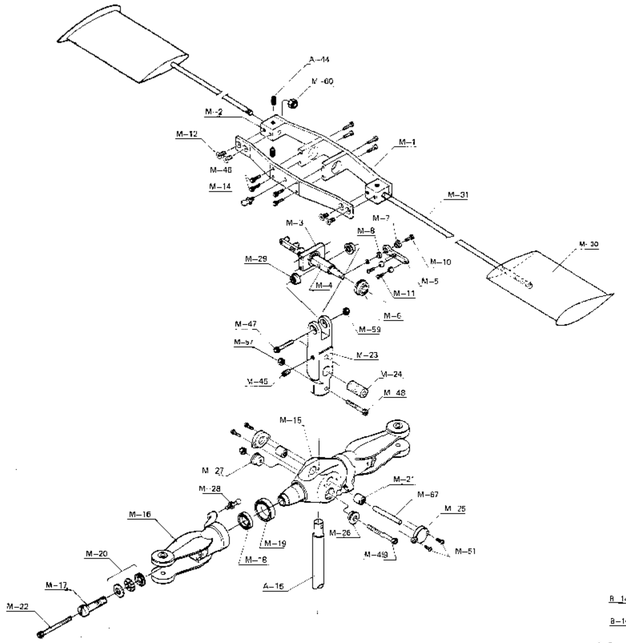

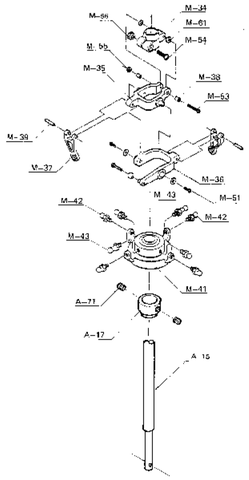

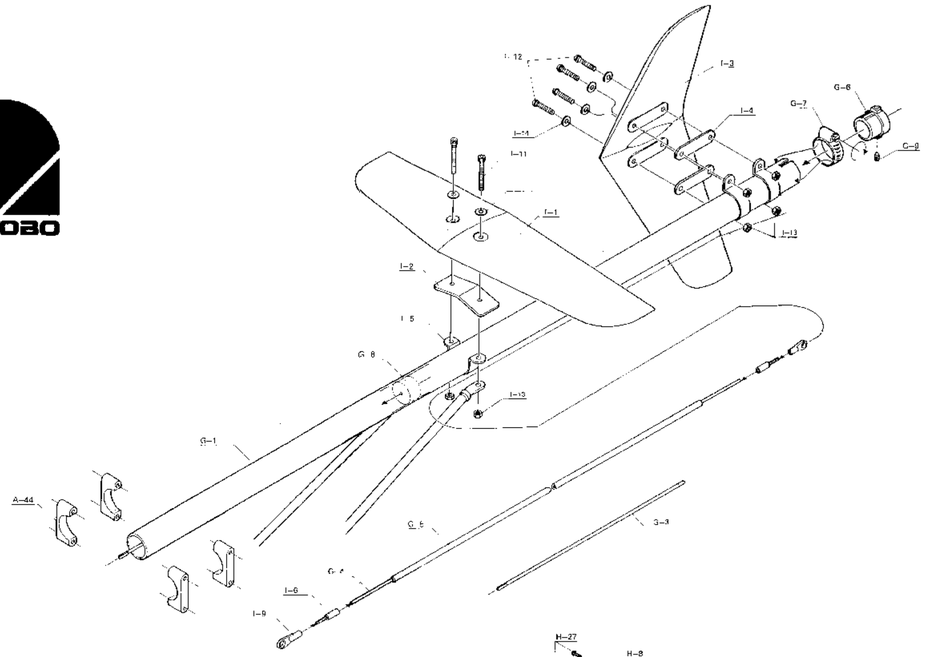

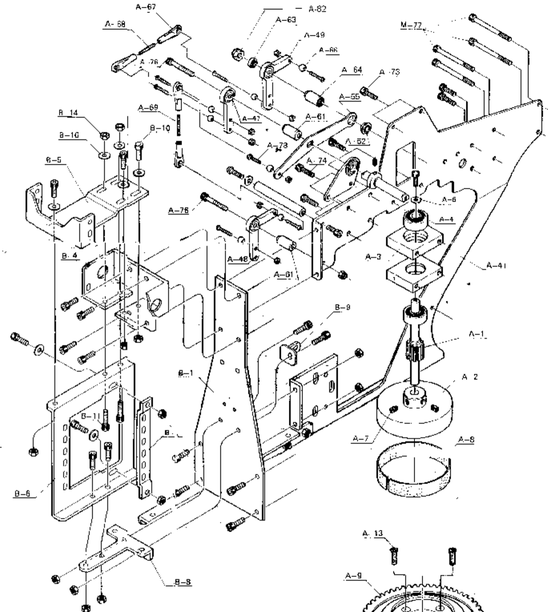

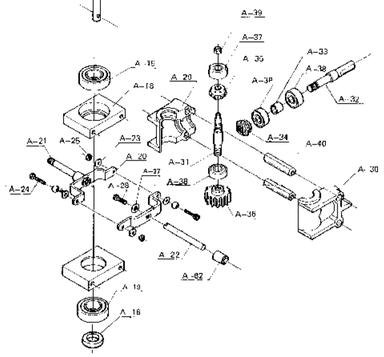

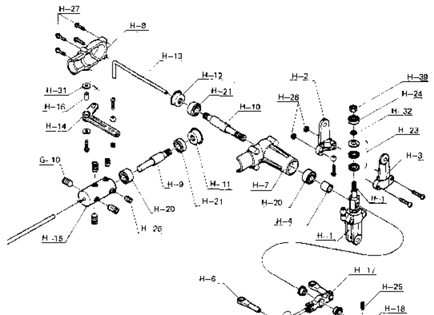

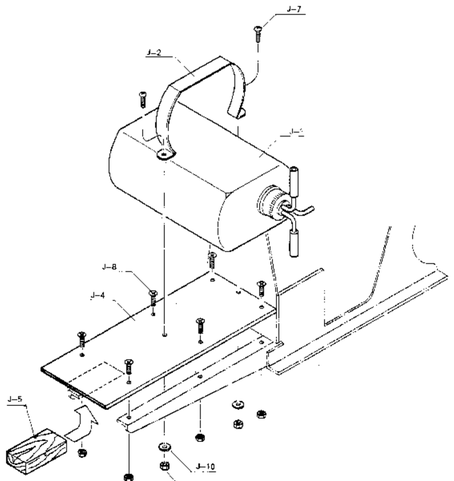

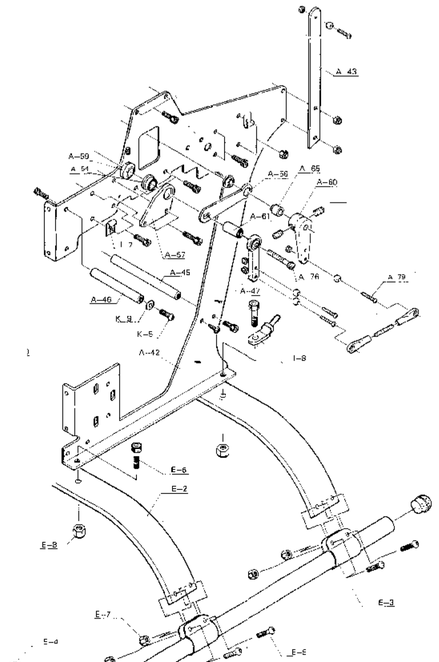

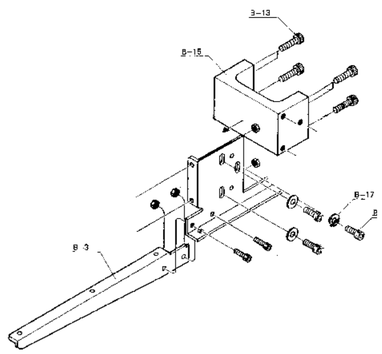

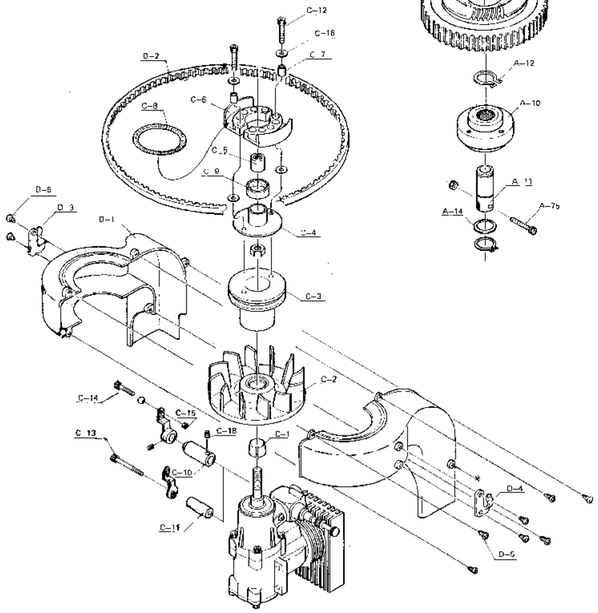

A-1	[illegible]	Spur gear with shaft
A-2	[illegible]	Metal (large) ball
A-3	[illegible]	40K metal Reg. holder
A-4	Reg. 6822	Reg. 6822
A-5	[illegible]	41 x 5 x 1 PW
A-6	[illegible]	46 x 5 Sa
A-7	[illegible]	Metal clutch ball fitting
A-8	[illegible]	Spur gear with bevel for autorotation
A-9	[illegible]	Auto rotation clutch for FALCON
A-10	[illegible]	Auto rotation drive shaft
A-11	[illegible]	3x12 drive screw
A-12	[illegible]	M3 x 20 Pan head screw
A-13	[illegible]	6-2 x 28 x 0.5 PW
A-14	[illegible]	FRP Main mast
A-15	[illegible]	41 x 10 x 3.5 Auto rotation collar
A-16	[illegible]	6900 Rust Proof
A-17	6888-0[illegible]	6900 Metal Reg. holder
A-18	Reg. 696022	Reg. 696022
A-19	[illegible]	Traverse lever
A-20	[illegible]	Traverse lever stack (A)
A-21	[illegible]	Traverse lever stack (B)
A-22	[illegible]	42 PW
A-23	M2.3 10 Cs	M2 x 10 Cs
A-24	M2.3 Ns	M2 Nut
A-25	M2.3 PW	M2.3 PW
A-26	M2.3 x 6 Cs	M2.3 x 6 Cs
A-27	[illegible]	TALCON counter gear case (A)
A-28	[illegible]	TALCON counter gear case (B)
A-29	[illegible]	TALCON counter shaft
A-30	[illegible]	TALCON joint shaft
A-31	[illegible]	TALCON joint shaft sep. holder
A-32	[illegible]	Miter gear (A) Left
A-33	[illegible]	Miter gear (B) Right
A-34	[illegible]	Bearing gear 37T
A-35	Reg. [illegible]	Reg. RL3002z
A-36	Reg. 6892z	Reg. 6892z
A-37	[illegible]	37 Nut
A-38	[illegible]	TALCON counter gear cross member
A-39	[illegible]	TALCON outward-bent main frame (A)
A-40	[illegible]	TALCON outward-bent main frame (B)
A-41	[illegible]	Rotor arm assy
A-42	[illegible]	Tail boom holder
A-43	[illegible]	Main frame reinforcement plate
A-44	[illegible]	RAR wind shield mounting cover
A-45	[illegible]	Pitch lever lever (Incl. Brg.)
A-46	[illegible]	Servo 1 type lever (Incl. Brg.)
A-47	[illegible]	Servo 1 type lever (Incl. Brg.)
A-48	[illegible]	Reg. LF740
A-49	[illegible]	Reg. LF1060ZZ
A-50	[illegible]	RX collect. pitch lever (A)(Incl. Brg.)
A-51	[illegible]	RX collect pitch lever (B)(Incl. Brg.)
A-52	[illegible]	RX pitch arm plate (Incl. Brg.)
A-53	[illegible]	Share lever
A-54	[illegible]	Elevator control lever
A-55	[illegible]	Lever set screw inner dia., 6mm long
A-56	[illegible]	Lever set screw inner dia., 8mm long
A-57	[illegible]	Reg. collar (Screw inner dia., 3mm long)
A-58	[illegible]	Reg. collar (Screw inner dia., 3mm long)
A-59	[illegible]	Reg. collar (Screw inner dia., 6mm long)
A-60	[illegible]	40 Bearing ball
A-61	[illegible]	Rod end
A-62	[illegible]	M2 x 28 Adjust rod
A-63	[illegible]	M2 x 21 Adjust rod
A-64	[illegible]	M4 x 35
A-65	[illegible]	M3 x 10 Cs
A-66	[illegible]	M3 x 12 Cs
A-67	[illegible]	M3 x 25 Cs
A-68	[illegible]	M2 x 12 Cs
A-69	[illegible]	M2 x 20 Cs
A-70	[illegible]	M2 x 30 Cs
A-71	[illegible]	M2 x 8 PW
A-72	[illegible]	M2 x 10 PW
A-73	[illegible]	M4 Nylon nut
A-74	[illegible]	Sub-frame
A-75	[illegible]	Rotor assy (B)
A-76	[illegible]	Rotor assy (A)
A-77	[illegible]	Servo assy (A)
A-78	[illegible]	Servo assy (B)
A-79	[illegible]	Servo assy (C)
A-80	[illegible]	Servo mounting bar
A-81	[illegible]	Servo panel stay
A-82	[illegible]	RAR Cooling cover mounting member
A-83	M3 x 18 Cs	M3 x 18 Cs

B-11	[illegible]	M3 x 22 Cs
B-12	[illegible]	M4 x 10 Cs
B-13	[illegible]	M4 x 15 Cs
B-14	[illegible]	M3 Nylon nut
B-15	[illegible]	Engine 8 power (cc: 60~81)
B-16	[illegible]	M3 PW
B-17	[illegible]	M3 PW
C-1	[illegible]	Inner spacer
C-2	[illegible]	Cooling fan
C-3	[illegible]	Starter pulley (A)
C-4	[illegible]	Metal clutch housing
C-5	[illegible]	Reg. 696056
C-6	[illegible]	Metal clutch shoe
C-7	[illegible]	Metal clutch disk collar
C-8	[illegible]	Metal clutch shoe spring
C-9	[illegible]	Rubber ring
C-10	[illegible]	Cut lever collar for US
C-11	[illegible]	Cut lever collar for UMTA
C-12	M3 x 16 Cs	M3 x 16 Cs
C-13	M3 x 25 TB Cs	M3 x 25 JIS Cs
C-14	M3 x 6 TB	M3 x 10 PW
C-15	[illegible]	M3 Nut
C-16	[illegible]	M3 PW
C-17	[illegible]	Reg. LF1060ZZ
C-18	M2.3 8 Sa	M2.3 8 Sa
D-1	[illegible]	Cooling shroud
D-2	[illegible]	Starting lever (L)
D-3	[illegible]	Starting belt hook (A)
D-4	[illegible]	Starting belt hook (B)
D-5	M3 x 6 Cs	M3 x 8 Cs
D-6	[illegible]	Belt cage
E-1	[illegible]	Belt floor
E-2	[illegible]	Belt cover
E-3	[illegible]	Belt guide cap
E-4	M3 x 12 PW	M3 x 12 PW
E-5	M3 x 10 Cs	M3 x 10 Cs
E-6	[illegible]	M3 Nylon nut
E-7	[illegible]	M3 Nylon nut
E-8	[illegible]	Tail plate (A)
G-0	[illegible]	Tail boom brace
G-1	[illegible]	Tail drive shaft φ6 x 757
G-2	[illegible]	Rudder control shaft φ12 x 1,000
G-3	[illegible]	Rudder control pipe φ6 x 920 PP
G-4	[illegible]	Tail holder
G-5	[illegible]	φ10 Flex clamp
G-6	[illegible]	Tail drive guide
G-7	M3 x 8 Sa	M3 x 8 Sa
G-8	M4 x 6 Sa	M4 x 6 Sa
H-1	[illegible]	New tail housing
H-2	[illegible]	New tail blade holder (A)
H-3	[illegible]	New tail blade holder (B)
H-4	[illegible]	φ7 x 3 collar
H-5	[illegible]	New tail pitch hinge
H-6	[illegible]	Rod end
H-7	[illegible]	Tail gear Box (A)
H-8	[illegible]	Tail gear Box (B)
H-9	[illegible]	Tail 2nd shaft
H-10	[illegible]	Bevel gear (A) Left
H-11	[illegible]	Miter gear (B) Right
H-12	[illegible]	Tail pitch rod
H-13	[illegible]	Tail pitch lever
H-14	[illegible]	Ball joint
H-15	[illegible]	φ9 x 5 collar
H-16	[illegible]	New tail pitch plate
H-17	[illegible]	Tail pitch stopper
H-18	[illegible]	φ5 x 8.8 Needle pin
H-19	Reg. 6822	Reg. 6822
H-20	Reg. 6809	Reg. 6809
H-21	Reg. LF1-8	Reg. LF1-8
H-22	Reg. 2K21-3	Reg. 2K21-3
H-23	Reg. 693-3	Reg. 693-3
H-24	M3 x 5 Sa	M3 x 5 Sa
H-25	M3 x 6 Sa	M3 x 6 Sa
H-26	M2 x 10 PW	M2 x 10 PW
H-27	M2 Nut	M2 Nut
H-28	M3 Nut	M3 Nut
H-29	M3 PW	M3 PW
H-30	φ3 x 6 x 0.5 PW	φ3 x 6 x 0.5 PW
H-31	Horizontal tail blade	Horizontal tail blade
I-1	[illegible]	Sub plate for horizontal tail blade
I-2	[illegible]	Vertical tail blade
I-3	[illegible]	Sub plate for vertical tail blade
I-4	[illegible]	Tail blade
I-5	[illegible]	Pipe nut
I-6	[illegible]	Adjust joint (A)
I-7	[illegible]	Wire sticker
I-8	[illegible]	Tail boom brace terminal
I-9	M3 x 20 Cs	M3 x 20 Cs
I-10	M3 x 20	M3 x 20
I-11	M3 Nylon nut	M3 Nylon nut
I-12	φ3 PW	φ3 PW
I-13	Reg. 4006	Fuel tank 400cc
I-14	Fuel tank hose	Fuel tank hose
J-1	[illegible]	φ5 x 200 x 1 Cover head
J-2	[illegible]	20 x 50 x 12 Control panel
J-3	[illegible]	7 x 12 PW
J-4	M3 x 10 Pan head screw	M3 x 10 Flush head screw
J-5	M3 Nut	M3 Nut
J-6	[illegible]	φ3 PW
J-7	M3 x 12 TB	M3 x 12 TB
J-8	φ3 PW	φ3 PW
J-9	[illegible]	Sesame plate
J-10	[illegible]	Stabilizer set holder
K-1	[illegible]	Sesame Reg. holder
K-2	[illegible]	Global shaft
K-3	[illegible]	Mixing arm
K-4	Reg. LF1580ZZ	Reg. LF1580ZZ
K-5	Reg. LF1060	Reg. LF1060
K-6	Reg. 1320	Reg. 1320
K-7	M2 x 8 Cs	M2 x 8 Cs
K-8	M2 x 7 PW	M2 x 7 PW
K-9	M3 x 8 Flush head screw	M3 x 8 Flush head screw
K-10	[illegible]	Pivot bolt (E)
K-11	[illegible]	Frame yoke
K-12	[illegible]	New blade holder
K-13	[illegible]	Thrust adjust bolt
K-14	Reg. 1R-16	Reg. 1R-16
K-15	Reg. 1R-6	Reg. 1R-6
K-16	Reg. CR5-12	Reg. CR5-12
K-17	Reg. 6000ZZ	Reg. 6000ZZ
K-18	M3 x 16 Cs	M3 x 16 Cs
K-19	[illegible]	Head center hub
K-20	[illegible]	New dewed rubber
K-21	[illegible]	Yoke dust cap
K-22	[illegible]	Yoke stopper collar (A)
K-23	[illegible]	Yoke stopper collar (B)
K-24	[illegible]	Pivot bolt (A)
K-25	[illegible]	Reg. 6810ZZ
K-26	[illegible]	Tapered stabilizer blade
K-27	[illegible]	Stabilizer bar (B)
K-28	[illegible]	New wash out mast block
K-29	[illegible]	New wash out pivot stm
K-30	[illegible]	New wash out control arm
K-31	[illegible]	New wash out radius arm
K-32	[illegible]	2 x 3 x 3.5 MS collar
K-33	[illegible]	φ2 x 11.5 Needle pin
K-34	[illegible]	Control head plate
K-35	[illegible]	Pivot bolt (D)
K-36	[illegible]	Pivot bolt (B)
K-37	[illegible]	M3 x 6 Sa
K-38	[illegible]	M3 x 6 Cs
K-39	[illegible]	M2.6 x 8 Cs
K-40	[illegible]	M3 x 8 Cs
K-41	[illegible]	M3 x 20 Cs
K-42	[illegible]	M3 x 28 Cs
K-43	[illegible]	M2 x 6 PW
K-44	[illegible]	M2 x 10 PW
K-45	[illegible]	M2 Nut
K-46	[illegible]	M2 PW
K-47	[illegible]	M3 Nut
K-48	[illegible]	M3 PW
K-49	[illegible]	φ3 x 6 x 0.5 PW
K-50	[illegible]	M3 Nylon nut
K-51	[illegible]	M3 Nut
K-52	[illegible]	φ3 PW
K-53	[illegible]	φ5 x 8.8 Needle pin