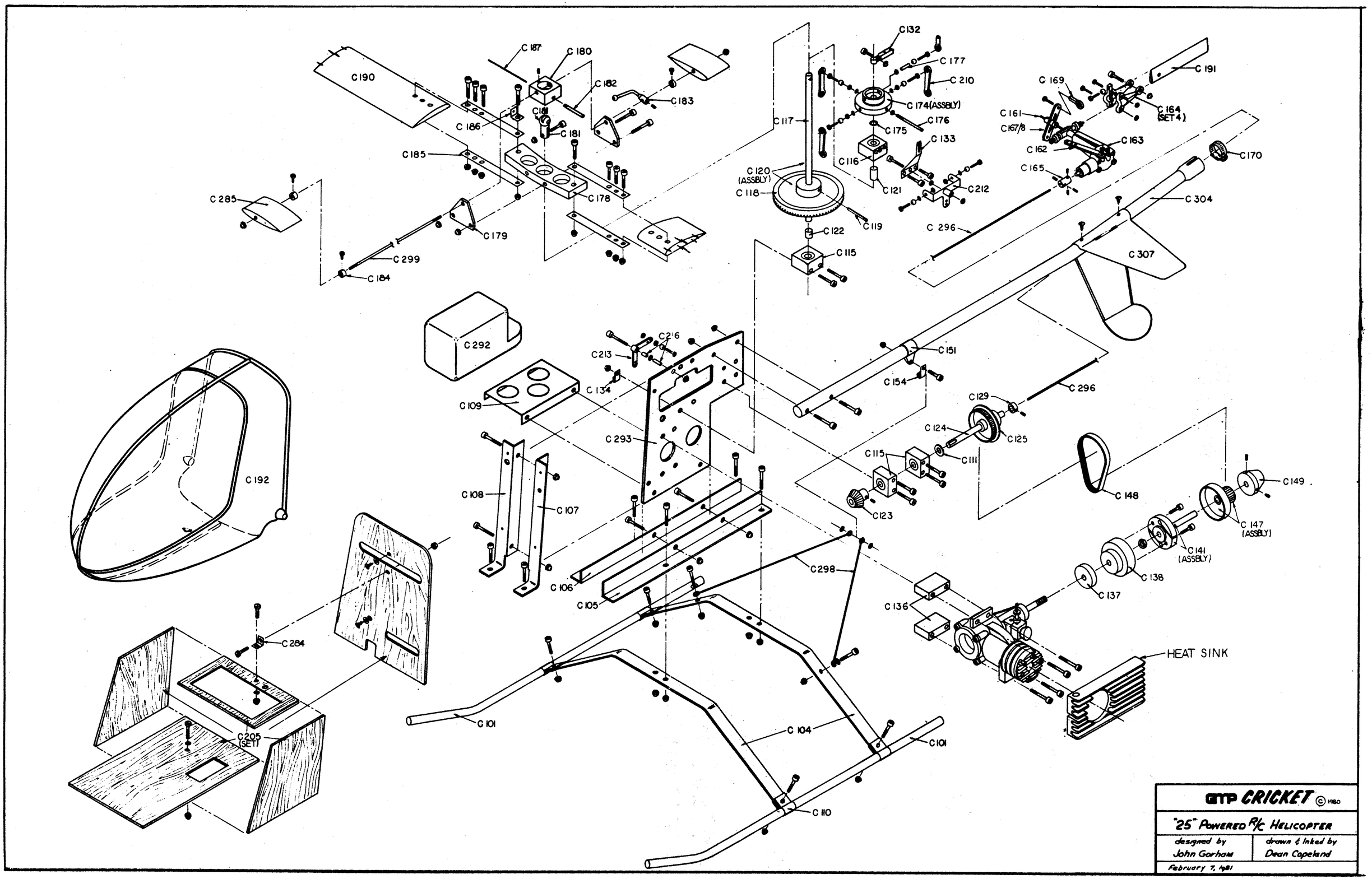
C 190
C 187
C 180
C 182
C 183
C 186
C 181
C 185
C 178
C 285
C 179
C 299
C 184
C 117
C 132
C 177
C 210
C 174(ASSBLY)
C 176
C 175
C 133
C 116
C 120 (ASSBLY)
C 118
C 121
C 212
C 119
C 122
C 115
C 169
C 191
C 161
C 164 (SET 4)
C 167/8
C 163
C 162
C 170
C 165
C 304
C 296
C 307
C 292
C 216
C 213
C 134
C 109
C 151
C 154
C 296
C 129
C 124
C 125
C 293
C 115
C 111
C 192
C 108
C 107
C 123
C 148
C 149
C 147 (ASSBLY)
C 141 (ASSBLY)
C 298
C 106
C 105
C 138
C 137
C 136
C 284
HEAT SINK
C 205 (SET 7)
C 101
C 104
C 101
C 110
GMP CRICKET © 1980
"25" POWERED R/C HELICOPTER
designed by
John Gorham
drawn & inked by
Dean Copeland
February 7, 1981